RADIOGRAPHY SHOOTING SKETCH

ITEM	DRAWING NO
2 ½" 2500 GLV BODY	2-V-G041 TO 044 & 049 TO 052 – 15104 R/05

SL. NO	LOCATION	THICKNESS mm	FILM SIZE cm	AREA Sq.cm
1	A1 – A2 TO A4-A1	25+25	10X15X4	600
2	B1 –B2 TO B4 – B1	25+25	10X15X4	600
3	C1 –C2 TO C4 – C1	35 + 35	15X15X4	900
4	D1&D2	20+20	10X15X2	300
		IR 192	TOTAL	2400

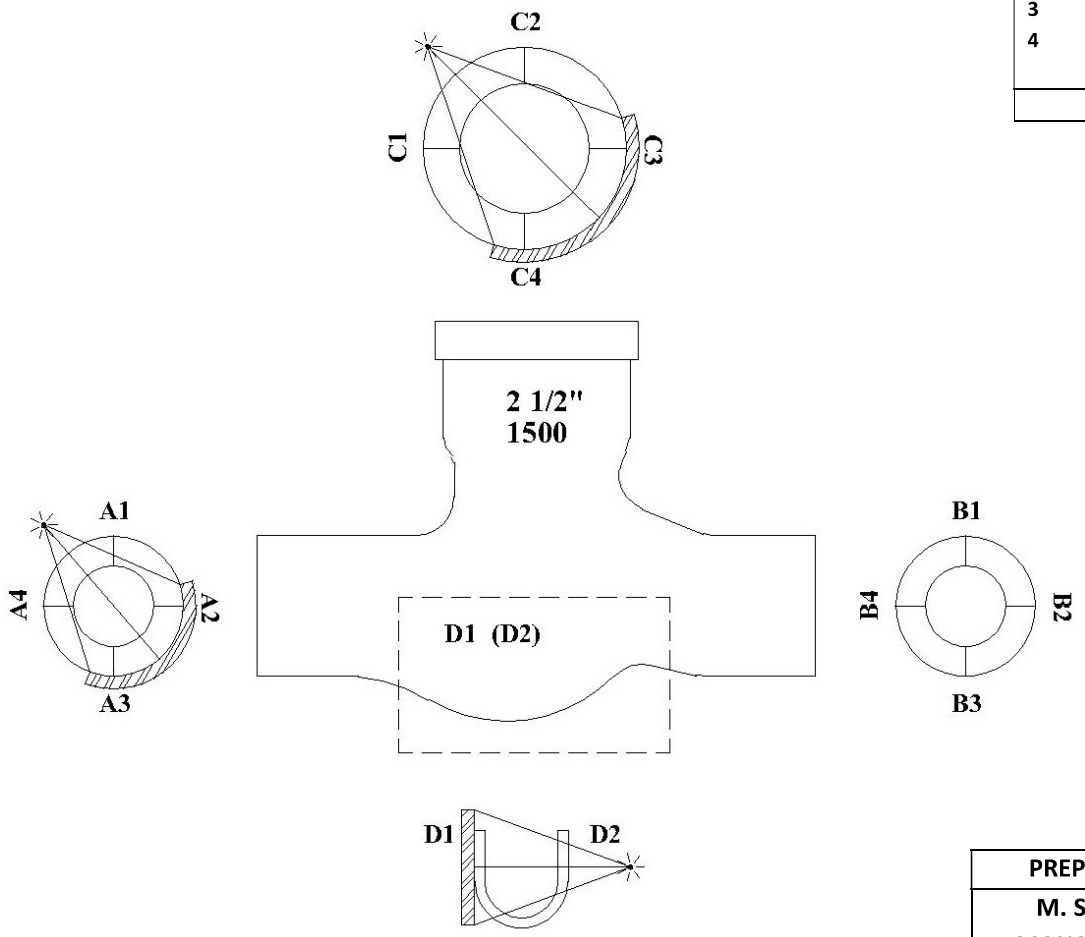

	SOURCE
	FILM
DWSI	DOUBLE WALL SIGLE IMAGE
A,B,C &D	NUMBER ON CAST SIDE

PREPARED BY	REVIEWD BY	APPROVED BY
M. SUBBIAH MANAGER/NDT LEVEL - II	P.MANOHAR MANAGER/NDT LEVEL –II	R.J.PARDIKAR AGM/NDT Sr.LEVEL- III

RADIOGRAPHY SHOOTING SKETCH

ITEM	DRAWING NO
3” 1500 GLV BODY	2-V-R208-15855R/01

SL. NO	LOCATION	THICKNESS mm	FILM SIZE cm	AREA Sq.cm
1	A1 – A2 TO A4-A1	25+25	10X15X4	600
2	B1 –B2 TO B4 – B1	25+25	10X15X4	600
3	C1 –C2 TO C4 – C1	36 +36	15X15X4	900
4	D1&D2	45+45	10X15X2	300
		IR 192	**TOTAL**	**2100**
		CO 60	**TOTAL**	**300**
			G.TOTAL	**2400**

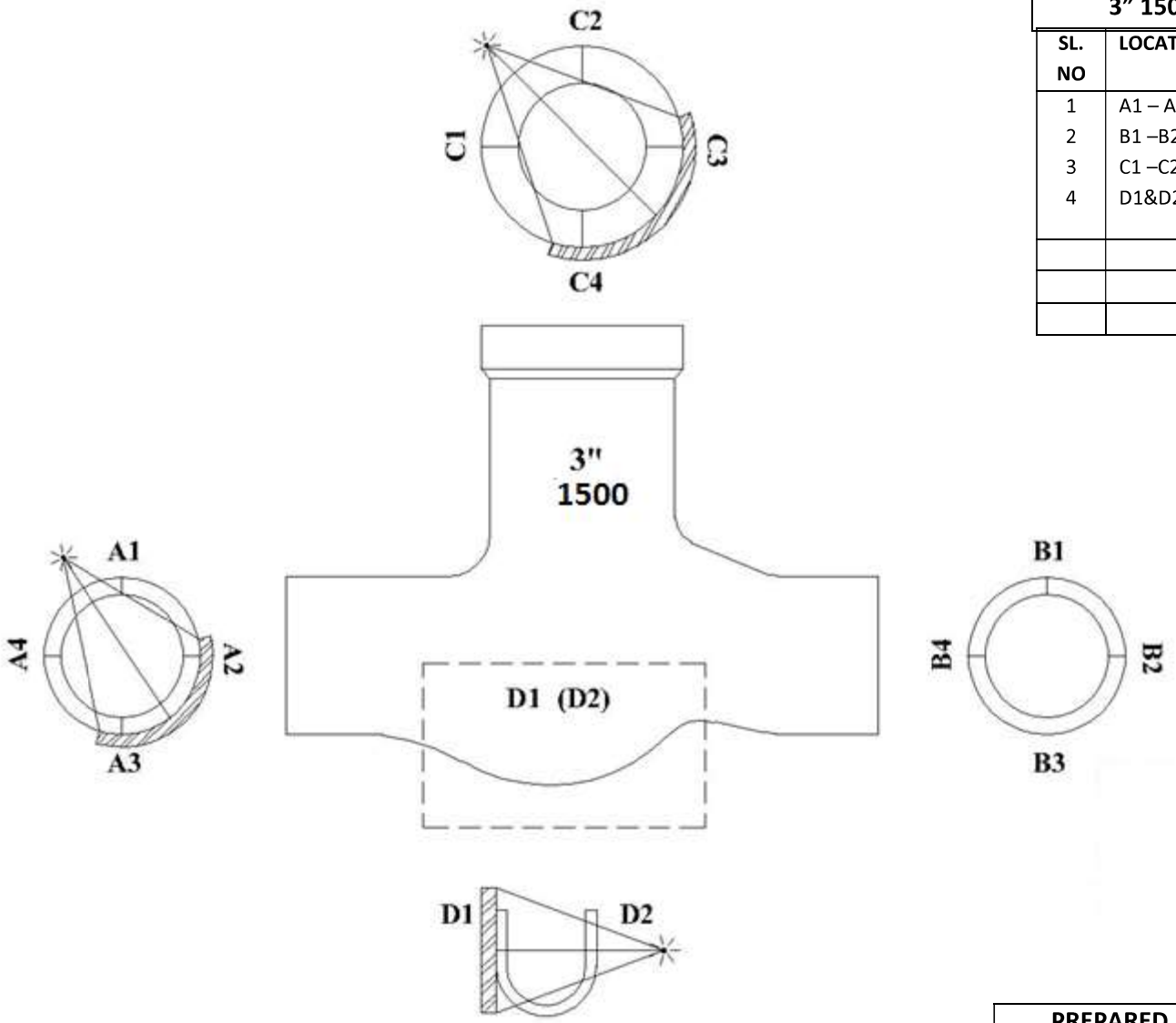

	SOURCE
	FILM
DWSI	DOUBLE WALL SIGLE IMAGE
A,B,C &D	NUMBER ON CAST SIDE

PREPARED BY	REVIEWD BY	APPROVED BY
M. SUBBIAH MANAGER/NDT LEVEL - II	P.MANOHAR MANAGER/NDT LEVEL –II	R.J.PARDIKAR AGM/NDT Sr.LEVEL- III

VENDOR PERFORMANCE MONITORING AND RATING SYSTEM

The vendors shall be assessed with respect to the following main factors and calculated for each consignment/purchase order/ cumulative quantity from all consignments within the period of six months.

Rating	Weightage(%)
Quality	60
Delivery	30
Service	10

QUALITY RATING

Total Quality Rating will be as per formula given below.

QUALITY RATING (QR) $= [(Q_1+0.75xQ_2+0xQ_3)\ x60]/Q$

Where Q - Quantity inspected
Q_1 - Quantity accepted
Q_2 - Quantity accepted with concession/ deviation/rectification
Q_3 - Quantity rejected

The pre-inspection report (at supplier's works) shall include the quantity accepted after rework in Q2 category.

DELIVERY RATING

Vendor shall be rated on delivery parameters whereas Delivery rating shall be 30 in case of adherence to PO delivery.

For non-adherence to PO Delivery (i.e delay in supply), marks to be deducted in proportion of delay to PO delivery.

Deduction = 30* delay in days/PO delivery in days.

DR = 30-Deduction

Note:
1. Delay is calculated on the date of GR/RR basis .
2. In cases, where delay is on account of BHEL in providing input, the delivery shall be extended with amendment to PO.
3. In case of rectification/replacement of item, the delivery is to be reckoned from the original supply date.

SERVICE RATING [SR, SR']

Service rating [SR'] out of 10 marks shall be given based on feedback from Quality/User department and Purchase department assessment of vendors. The service rating shall be

10 in case no negative feedback against the vendor for the given supply. Else, the service rating should be reduced proportionally based on the Demerit factor.

In case negative feedback (Substantiated by documentary evidence) is received from Shop Floor/Site on the supplies made, at a later date, demerit factor should be applied again accordingly.

Demerit factors for service rating shall be calculated based on % of rework and rejection [both taken separately and then added] as under:

% criteria	DF in case of Rework %
≤2%	0
>2% and ≤5%	2
>5% and ≤10%	3
>10% and ≤15%	4
>15%	5

% criteria	DF in case of Rejection %
≤0.5%	0
>0.5% and ≤2%	2
>2% and ≤5%	3
>5% and ≤10%	4
>10%	5

The SR' derived shall be updated by subtracting above demerit factor value, i.e. SR = SR'-DF. By virtue of SR' < DF in any case, i.e. SR coming negative, it shall be considered as "0".

The Vendor Performance Rating (VPR) will be equal to total sum of QR, DR & SR.

VENDOR PERFORMANCE RATING (VPR) = QR+DR+SR

Based on the total score the vendor performance will be rated as below.

Total Score	Rating	Action
95-100	A1	Can be considered for award appreciation/commendation letter.
90-95	A	Vendor can be considered for self certification or for reduced witness points during inspection.
75-90	B	No action in normal case. If any deterioration comes to notice on analysis, the vendor shall be informed.
60-75	C	(i) Vendor/ processes shall be subject to thorough analysis for identification of areas for improvement. (ii) Enquiry to be sent only after concerned MM Head approval
<60	D	To be dealt in accordance with the extant guidelines on suspension of Business dealings with Suppliers/contractors.

Ajit Kumar

Annexure D

BHE:IVP:RT:PR Rev 03

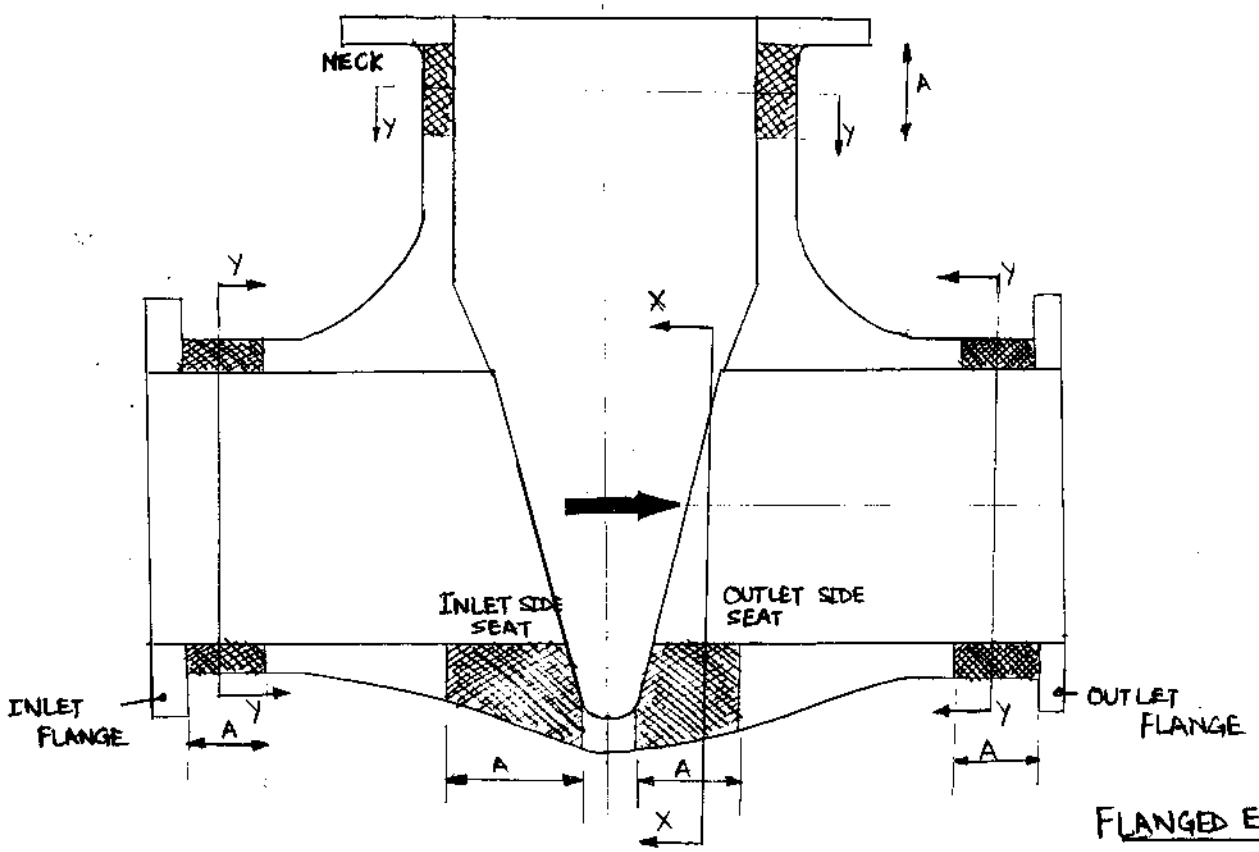

FLANGED END BODY

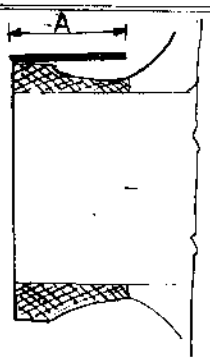

BW END BODY

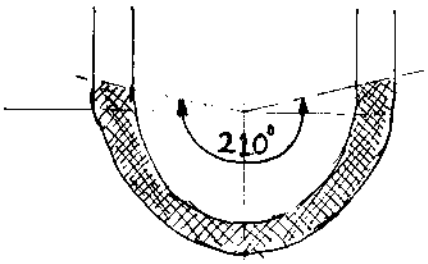

SECTION X-X
210° coverage

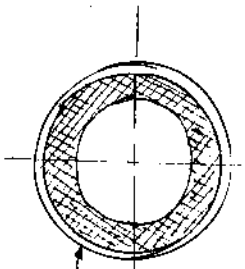

To cover round the shell
SECTION YY

A = Max [3 tm , 70 mm]
tm → wall thickness 'min'

SHOOTING LOCATION DESIGNATION

AT NECK	: N1, N2, N3, N4,...
AT INLET FLANGE PIPE	: A1, A2, A3, A4,....
AT INLET SIDE SEAT	: SA1, SA2, SA3, SA4,....
AT OUTLET SIDE SEAT	: SB1, SB2, SB3, SB4,...
AT OUTLET FLANGE PIPE	: B1, B2, B3, B4.....
*AT INLET FLANGE FACE	: FA1, FA2, FA3, FA4,....
*AT OUTLET FLANGE FACE	: FB1, FB2, FB3, FB4,....

* FOR FLANGED END BODIES ONLY

BHE: IVP: RT: PR: Rev 3

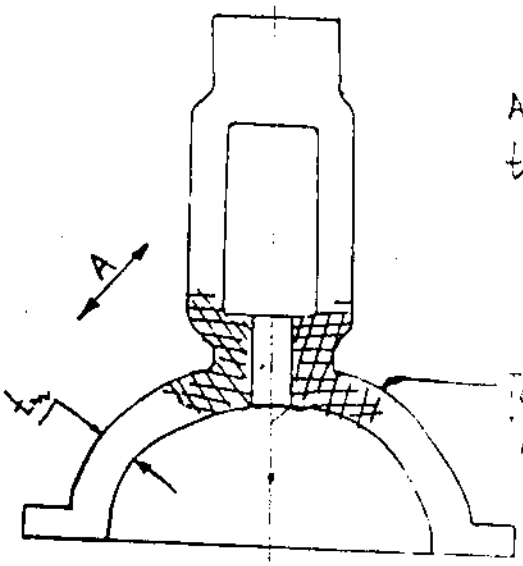

A = Max [3 t_m , 70 mm]

t_m → wall thkness, min

SHOT DESIGNATION AS 1, 2, 3, 4, . . .

SHOOTING SKETCH OF GATE VALVE YOKE / BONNET

Bharat Heavy Electricals Limited
433, Ind. Valves Plant, GOINDWAL SAHIB (Distt. Amritsar)-143 423.

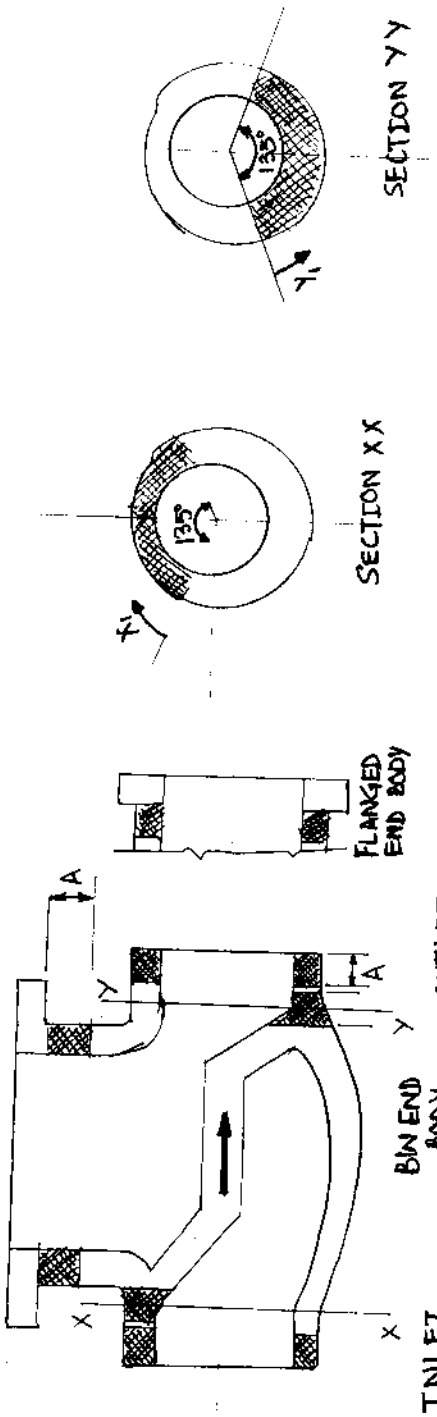

A = Max {3.t_m, 70mm}

t_m → min. wall thickness, mm

SHOOTING LOCATION	DESIGNATION
AT NECK	N1, N2, N3, ...
AT INLET END	A1, A2, A3, ...
AT OUTLET END	B1, B2, B3, ...
AT SECTION XX	X_1, X_2, ...
AT SECTION YY	Y_1, Y_2, ...

SHOWING SKETCH OF CORNER

A = max [2 t_m, 70 mm]

t_m = min thickness, mm

To cover full area round the bonnet

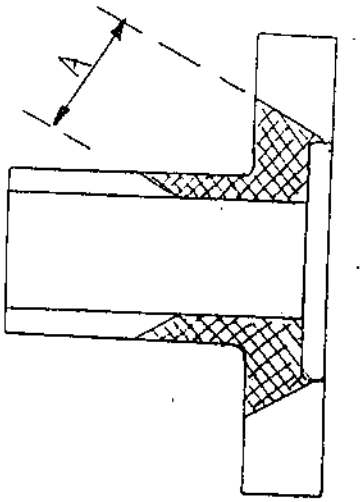

BHE: IVP: RT: PR Rev 03

SHOOTING SKETCH OF FLAP VALVE BODY

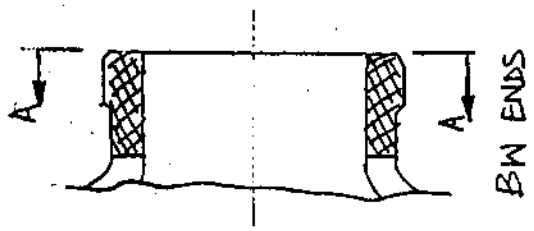

SHOOTING LOCATION	DESIGNATION
AT NECK	N1, N2, N3, ...
AT INLET PIPE	A1, A2, A3, ...
AT INLET BW END	FA1, FA2, ...
AT OUTLET PIPE	B1, B2, B3, ...
AT OUTLET BW END	FB1, FB2, FB3, ...
AT SEAT	S1, S2, S3, ...

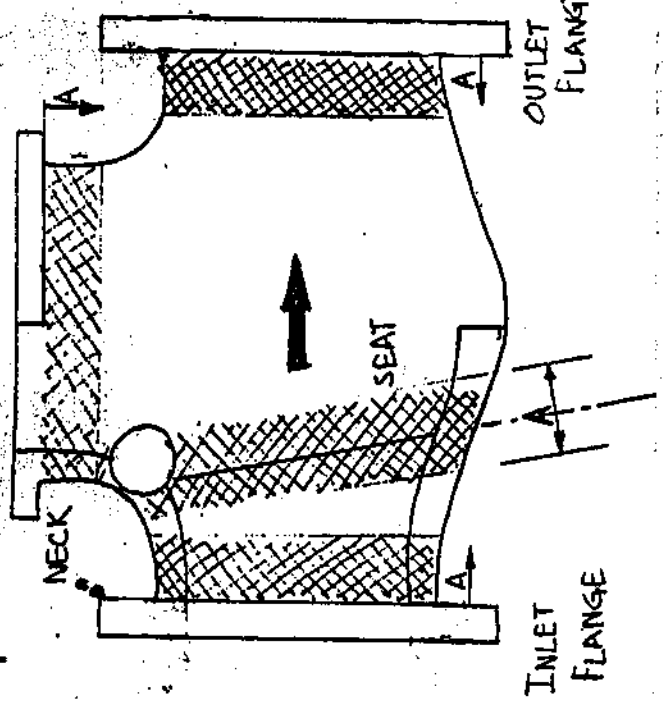

DIRECTION AND SHOT LOCATION

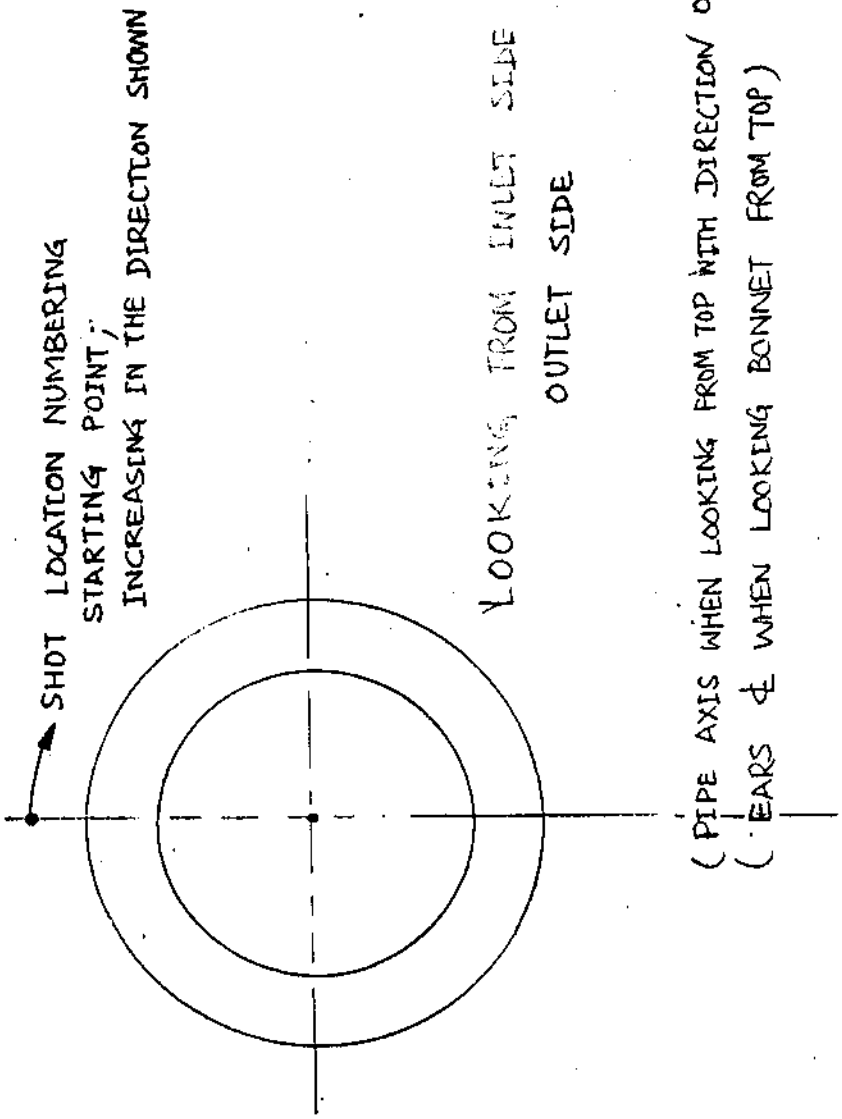

DRAWING NO: 1-V-0000-02904R

ALL DIMENSIONS ARE IN MILLIMETRES. FOR TOLERANCES OF UNTOLERANCED DIMENSIONS DURING MANUFACTURE REFER RELEVANT QCP/QP

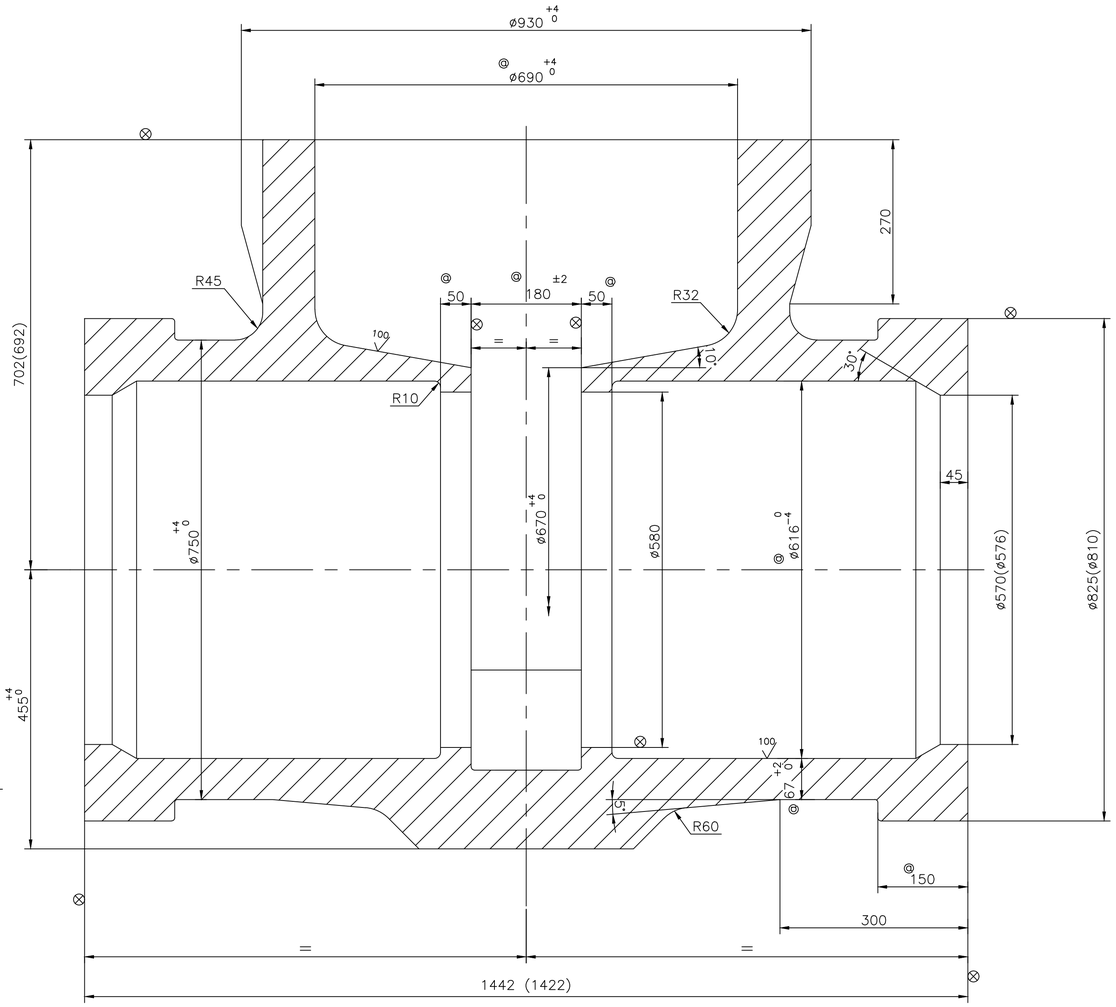

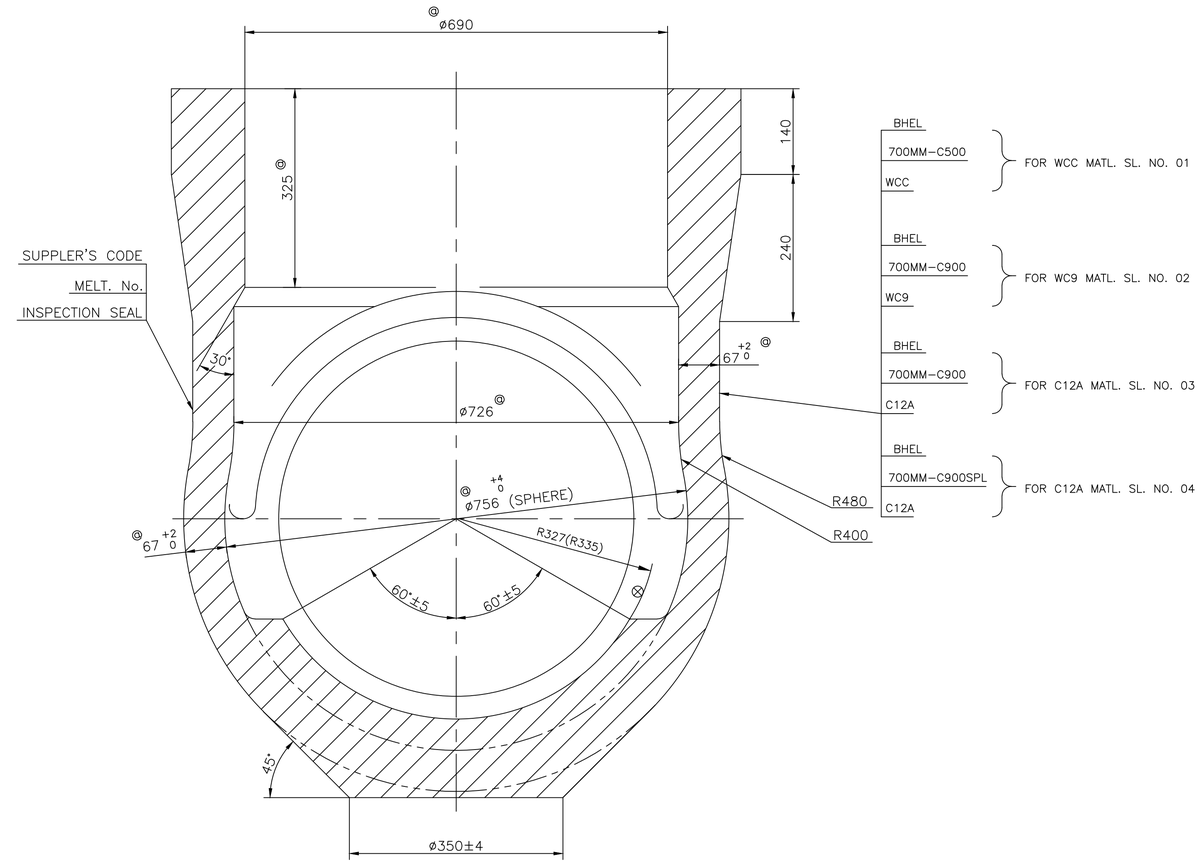

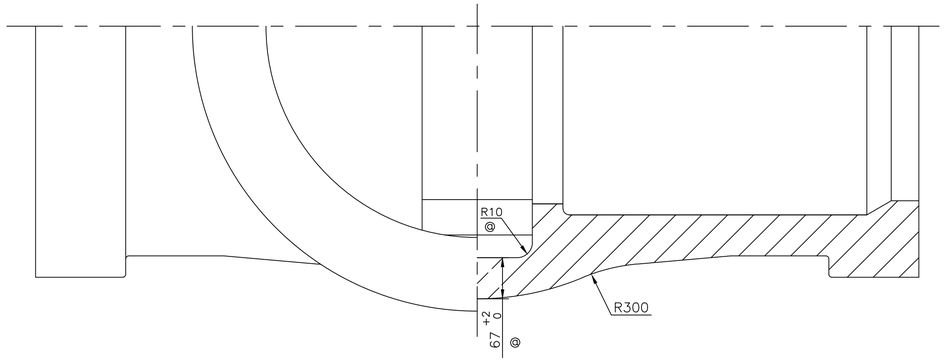

NOTE

01. NECESSARY MACHINING ALLOWANCES HAVE BEEN ADDED ON ALL MACHINABLE SURFACES.
02. FINISH MACHINED DIMENSIONS ARE INDICATED WITHIN BRACKETS FOR INFORMATION ONLY.
03. LETTERS– BHEL,SIZE,MATL.& SUPPLIERS CODE ARE TO BE CAST IN THE INDICATED ZONE.
04. CASTING SHALL COMPLY WITH THE REQUIREMENTS OF APPLICABLE QUALITY PROCEDURE
05. UNSPECIFIED CASTING RADII = R3 TO R5
06. HEIGHT OF CASTING LETTERS = 40 mm
07. ⊗ INDICATES SURFACE TO BE MACHINED.
08. 100/ INDICATED CASTING SURFACES SHALL BE OF HIGH QUALITY WITHOUT SURFACE UNEVENNESS.
09. MELT NUMBER AND INSPECTION SEAL ARE TO BE PUNCHED.
10. * FOR THE SPECIAL CLASS VALVES EMBOSSING SHALL BE '900SPL'
11. * THIS SPECIAL CLASS CASTING IS TO BE SUBJECTED RT/UT ON ALL CRITICAL LOCATIONS.
12. * ALL EXTERIOR AND ACCESSIBLE INTERIOR SURFACES OF BODY SHALL BE MPI/LPI TESTED.
13. * QUALITY PROCEDURE AS APPLICABLE TO SPECIAL CLASS VALVE.

Sl.No.	DESCRIPTION	MATL CODE	MATL SPECN	HEAT TREATMENT	SCRAP SORT	NET WT (kg)	GROSS WT (kg)	DRAWING No / COMPONENT CODE	ITEM No
*04	CASTING	–	SA217 C12A ATTEST	NORMALISED & TEMPERED	–	3025	–	1.V.3399.02904R / 92 203 861 0000	001
03	CASTING	–	ASTM A217 C12A ATTEST	NORMALISED & TEMPERED	–	3025	–	1.V.3244.02904R/2 / 92 201 680 0000	001
02	CASTING	–	ASTM A217 WC9 ATTEST	NORMALISED & TEMPERED	–	3025	–	1.V.3205.02904R/7 / 92 027 065 0000	001
01	CASTING	–	ASTM A216 WCC ATTEST	NORMALISED	–	3025	–	1.V.3204.02904R/7 / 92 027 064 0000	001

REV	DATE	ALTERED	
09	03.08.19	R.P.SINGH / CHD & APPD SSK & KRS	SL. No. 04 INCLUDED. NOTES 10 TO 13 INCLUDED. NET WT. 3025 WAS 2700.
08	18.08.09	M.SRINIVASAN / CHD & APPD M.RAJAKUMAR	GROOVE AT SEAT ZONE REMOVED. DCP:800979
07	10.03.09	M.SRINIVASAN / CHD & APPD P.BOOMINATHAN	DCP:800931 @ MARKED DIMENSIONS ARE REVISED / INCLUDED.
06	18.08.07	M.SRINIVASAN / CHD & APPD P.BOOMINATHAN	SL. No. 03 INCLUDED.
05	17.4.99	R.MOHAN / CHD & APPD C.V.L.N	DCN FS : 0761 DIMENSION ø570 (ø576) WAS ø580 (ø590)
04	10.3.97	T.R.RAMAMURTHY / CHD & APPD A.VISWANATHAN	NOTES UPDATED REFER DCN:CS:0670
03	23.7.94	M.SRINIVASAN / CHD & APPD N.NAGARAJAN	DCN:FS:0237 DIMENSIONS ø580 (ø590), 45 & 30° INCLUDED ON WELD END.
02	10.12.90	M.SRINIVASAN / CHD & APPD N.NAGARAJAN	CASTING LETTERS 700MM−C500 &700MM−C900 WERE 28"−C500 &28"−C900 RESPECTIVELY.
01	14.09.90	N.P.ESWARAN / CHD & APPD N.NAGARAJAN	DCN FS : 0761 ø600 −4 0 WAS ø614 −4 0 AT INLET AND OUTLET PORT ZONE THIS IS BASED ON THE REQUEST FROM FOUNDARY

CAUTION: The information on this document is the property of BHARAT HEAVY ELECTRICALS LTD. It must not be used directly or indirectly in any way detrimental to the interest of the company.

TYPE OF PRODUCT OR NAME OF CUSTOMER/PROJECT

BHARAT HEAVY ELECTRICALS LTD.
UNIT: HIGH PRESSURE BOILER PLANT.
TIRUCHIRAPALLI-620014.
365-119

	NAME	SIGN	DATE
DRN	M.SRINIVASAN		31.08.90
CHD	N.P.ESWARAN		31.08.90
APPD	N.NAGARAJAN		31.08.90

DEPT: VL
CODE: 320
SCALE: NTS
WEIGHT (KG): 3025
REFERENCE INFORMATIONS

TITLE: BODY (700 MM)
CARD CODE: U 01
DRAWING NO.: 1-V-0000-02904R
REV: 09

Size A1

DRAWING NO. 1-V-0000-05142R

ALL DIMENSIONS ARE IN MILLIMETRES. FOR TOLERANCES OF UNTOLERANCED DIMENSIONS DURING MANUFACTURE REFER RELEVANT QCP/QP

SECTION AA

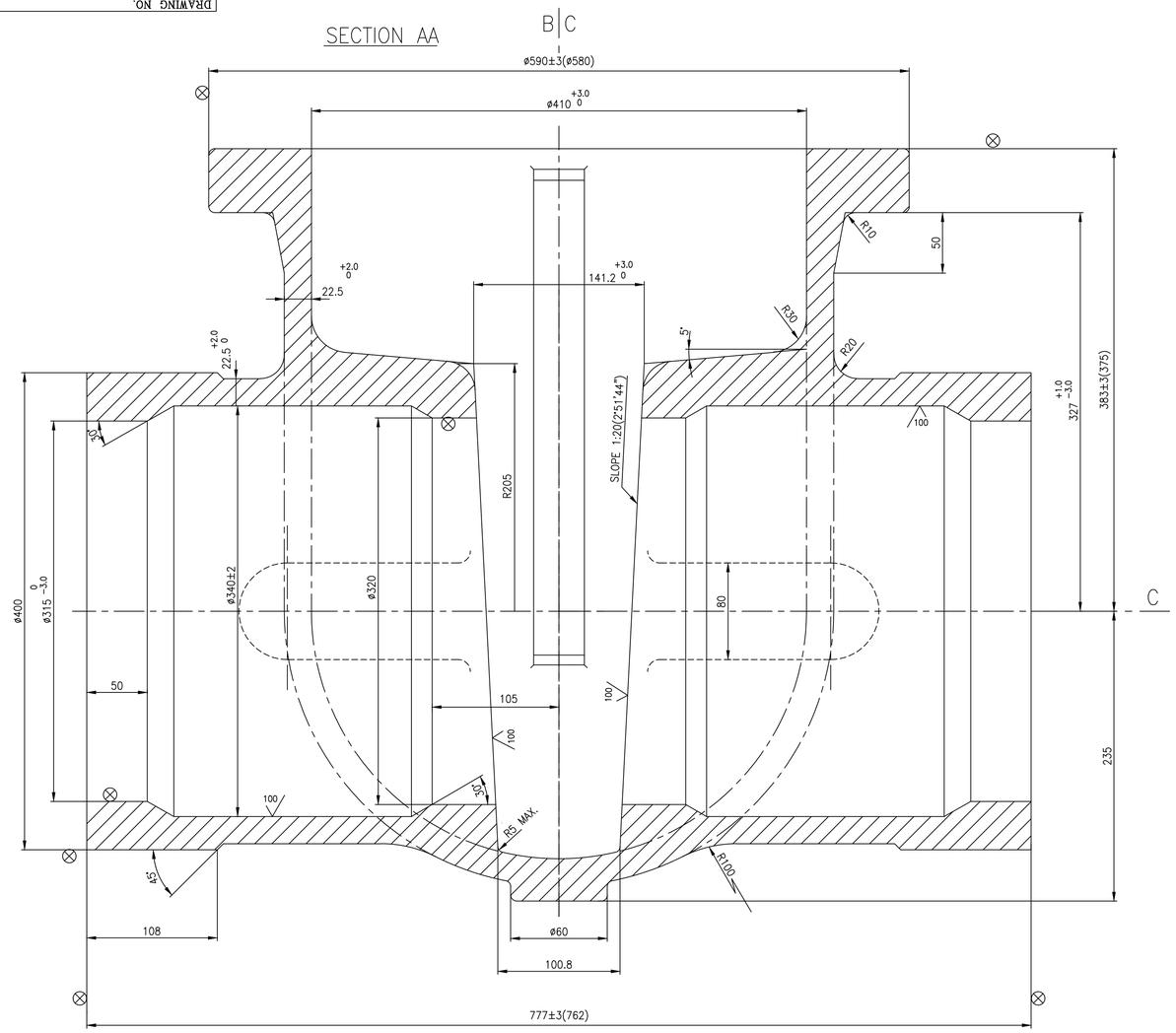

SECTION BB

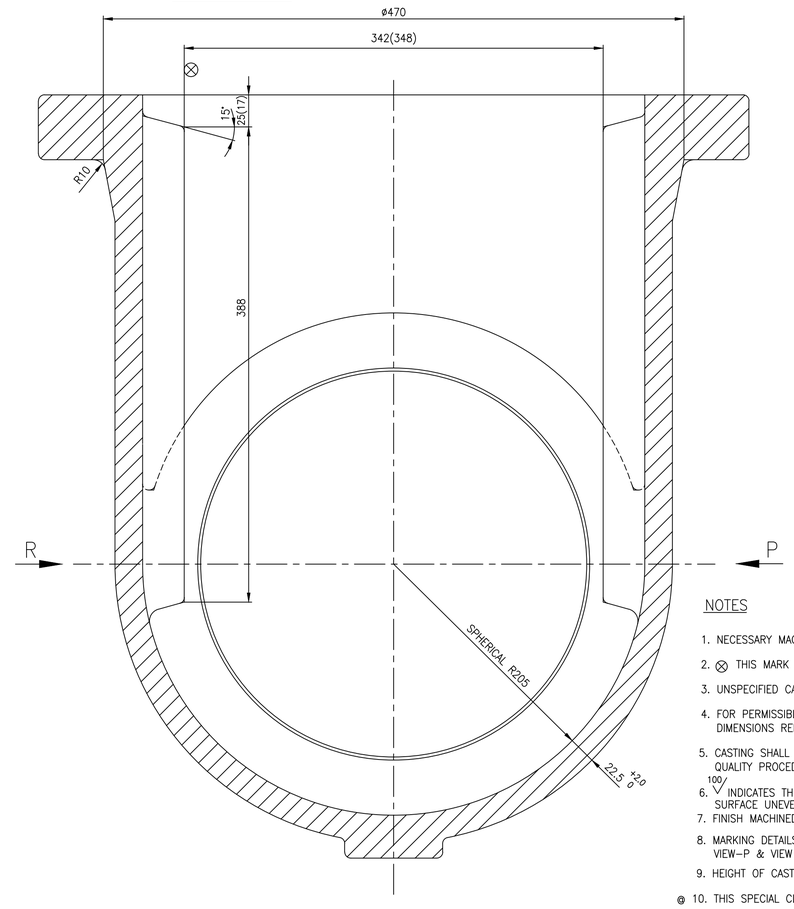

NOTES

1. NECESSARY MACHINING ALLOWANCES HAVE BEEN ADDED ON ALL MACHINABLE SURFACES.
2. ⊗ THIS MARK INDICATES THE SURFACES TO BE MACHINED.
3. UNSPECIFIED CASTING RADII–R5 MAX.
4. FOR PERMISSIBLE DIMENSIONAL DEVIATIONS OF NON TOLERANCED CASTING DIMENSIONS REFER LATEST APPLICABLE QUALITY PROCEDURE
5. CASTING SHALL GENERALLY COMPLY WITH THE REQUIREMENTS OF LATEST APPLICABLE QUALITY PROCEDURE IN ALL RESPECTS.
6. 100 ✓ INDICATES THE CASTING SURFACES WHICH MUST BE OF HIGH QUALITY WITHOUT SURFACE UNEVENNESS.
7. FINISH MACHINED DIMENSIONS ARE INDICATED WITHIN BRACKETS FOR INFORMATION ONLY,.
8. MARKING DETAILS SHALL BE MARKED ONLY ON RAISED FLAT SURFACE GIVEN AT VIEW–P & VIEW R
9. HEIGHT OF CASTING LETTERS 30mm.
10. @ THIS SPECIAL CLASS CASTING IS TO BE SUBJECTED RT/UT ON ALL CRITICAL LOCATIONS.
11. @ ALL EXTERIOR AND ACCESSIBLE INTERIOR SURFACES OF BODY SHALL BE MPI/LPI TESTED.

SECTION CC

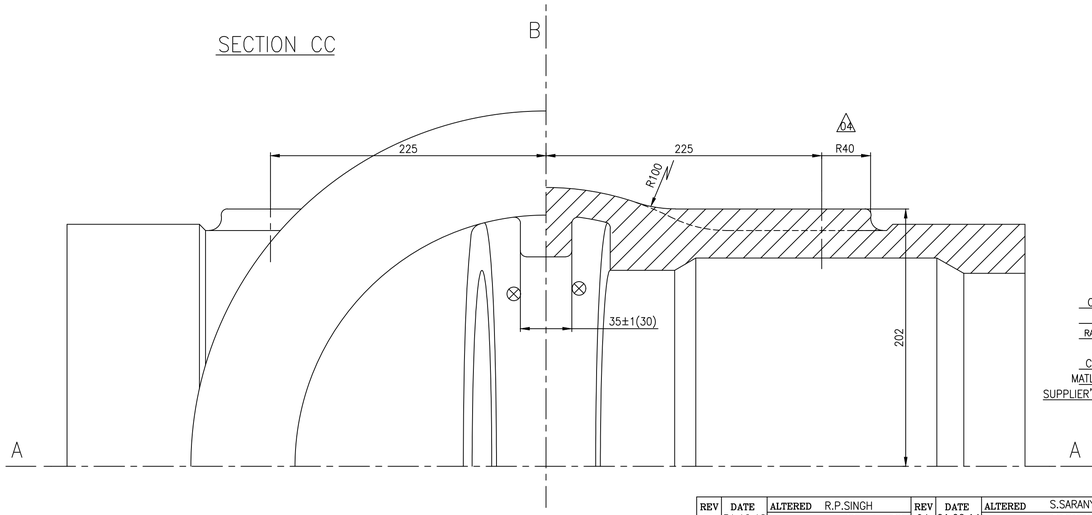

MARKING DETAILS ON CASTING

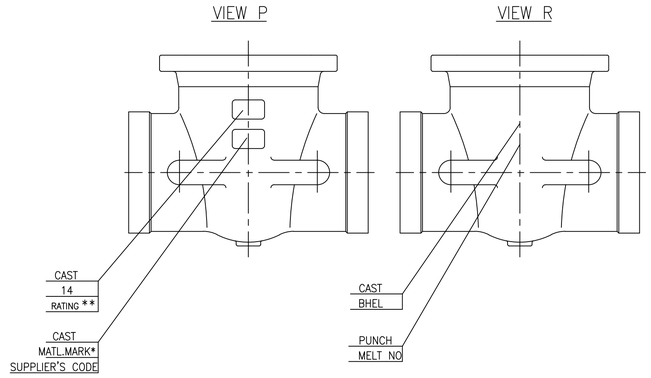

RATING **	MATL. MARK *	SL.No.	DESCRIPTION	MATL CODE	MATL SPECN	HEAT TREATMENT	SCRAP SORT	NET WT (kg)	GROSS WT (kg)	DRAWING No / COMPONENT CODE	ITEM No
@ 300 SPL	WC9	05	–	–	SA217 WC9, ATTEST	NT	–	–	292	1.V.NK55.05142R / 92 203 831 0000	–
300	CF8M	04	–	–	SA351 CF8M ATTEST	SH	–	–	292	1.V.NH86.05142R / 92 203 208 0000	–
300	C12A	03	–	–	A217 C12A, ATTEST	NT	–	–	292	1.V.NG86.05142R/01 / 92 203 043 0000	–
300	WC9	02	–	–	A217 WC9, ATTEST	NT	–	–	292	1.V.N622.05142R/02 / 92 200 846 0000	–
300	WCB	01	–	–	A216 WCB, ATTEST	NR	–	–	292	1.V.N593.05142R/02 / 92 200 791 0000	–

REV	DATE	ALTERED	
05	31.12.18	R.P.SINGH	CHD & APPD SSK & KRS
		SL.NO. 05 INCLUDED. NOTES NO. 10 & 11 INCLUDED.	
04	01.02.14	S.SARANYA	CHD & APPD S.S.K & K.R.S
		DIMENSION R40 WAS R30. SL. No. 04 INCLUDED	
03	13.06.12	M.SRINIVASAN	CHD & APPD M.RAJAKUMAR
		SL. No. 03 INCLUDED DCP:801645	
02	13.4.99	R.L.N	CHD & APPD M.R.K
		DIMENSIONS 108,ø320,105,30°&45° INCLUDED. DIMENSIONS 100.8,141.2 +3 0, 321 +1 -3, 327 0 -2, 40&ø322, REPSPLY. DCN. NO. HM0386	
01	24.2.97	R.L.N	CHD & APPD M.R.K
		SL No.02 INCLUDED	

CAUTION: The information on this document is the property of BHARAT HEAVY ELECTRICALS LTD. It must not be used directly or indirectly in any way detrimental to the interest of the company.

TYPE OF PRODUCT
OR NAME OF
CUSTOMER/PROJECT

BHARAT HEAVY ELECTRICALS LTD.,
UNIT: HIGH PRESSURE BOILER PLANT.
TIRUCHIRAPALLI-620014.
365-119

	NAME	SIGN	DATE
DRN	V.BAIRAVAN		17.12.96
CHD	R.L.NARAYANAN		17.12.96
APPD	M.RAJAKUMAR		28.12.96

DEPT VL
CODE 320
SCALE N T S
WEIGHT (KG). –
REFERENCE INFORMATIONS
CAD REF. NO:C105142R

TITLE
BODY
14"/300 CL

CARD CODE U 01

DRAWING NO. 1-V-0000-05142R REV 05

Size A1

DRAWING NO. 1-V-0000-05254R

ALL DIMENSIONS ARE IN MILLIMETRES. FOR TOLERANCES OF UNTOLERANCED DIMENSIONS DURING MANUFACTURE REFER RELEVANT QCP/QP

100

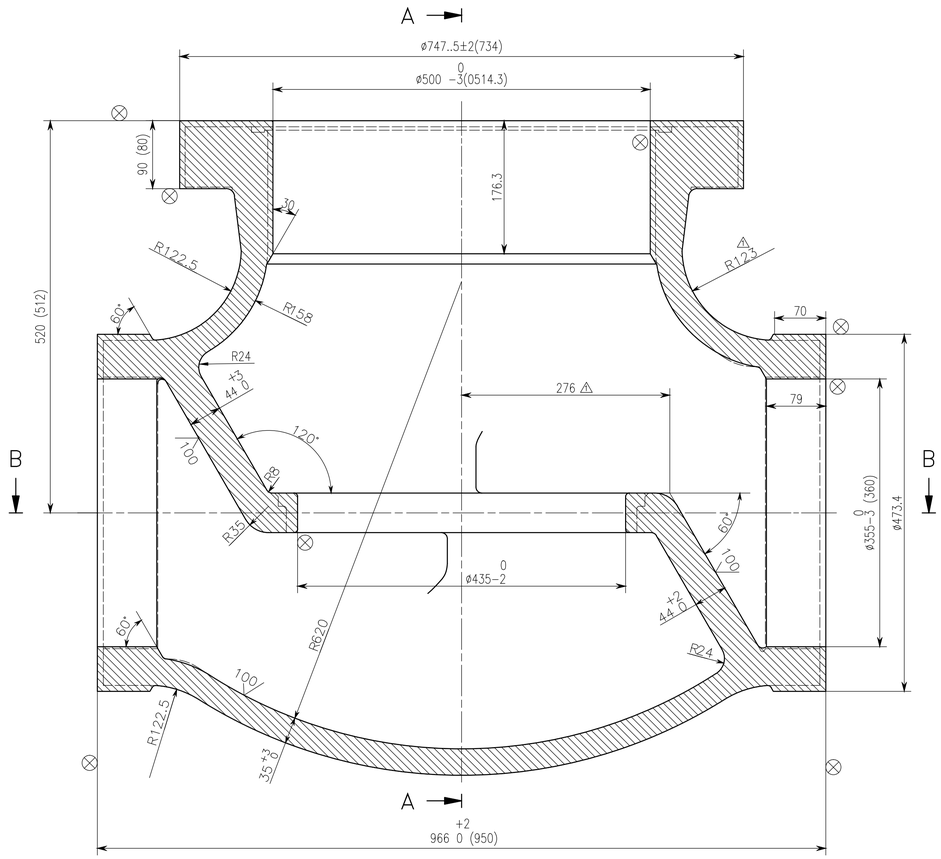

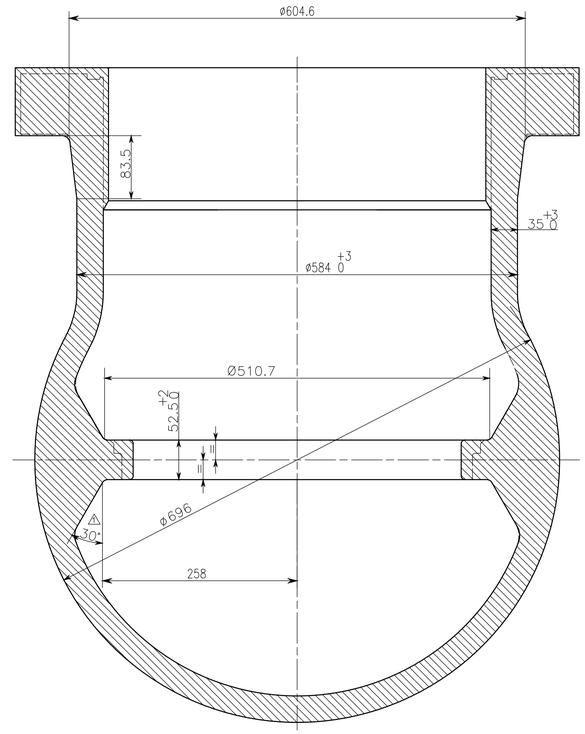

SECTION A–A

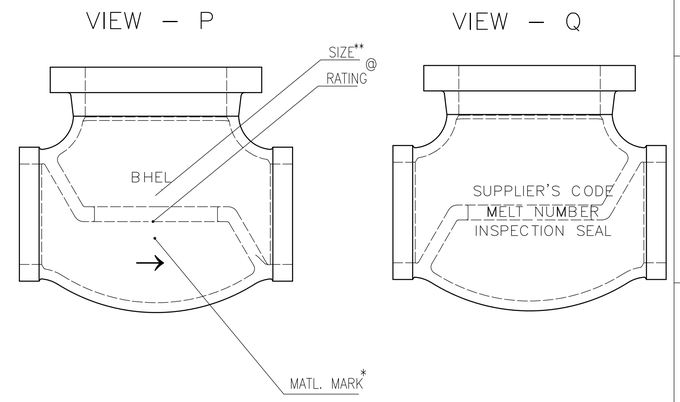

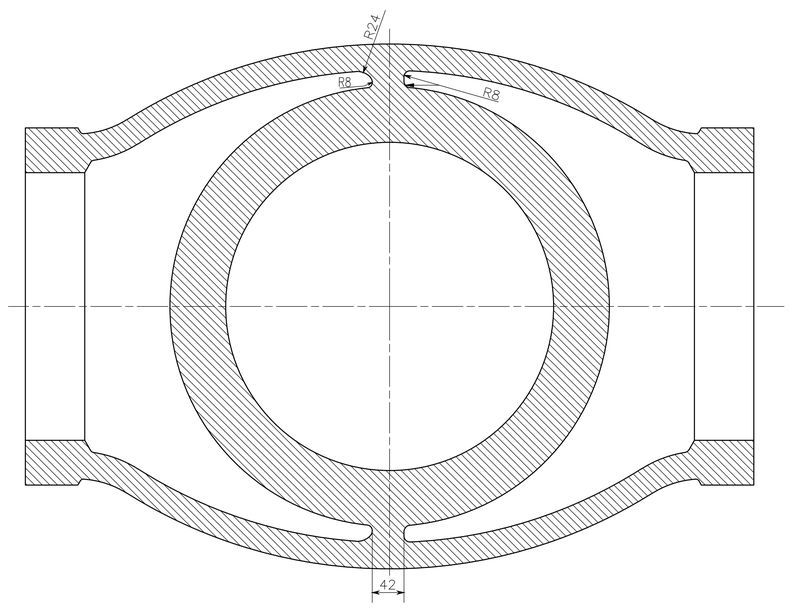

SECTION B–B

NOTES:

01. CASTING SHALL COMPLLY WITH THE REQUIREMENTS OF APPLICABLE QUALITY PROCEDURE.
02. NECESSARY MACHINING ALLOWANCES HAVE BEEN ADDED ON ALL MACHINABLE SURFACES.
03. ⊗ INDICATES SURFACE TO BE MACHINED.
04. 100 ∨ INDICATES CASTING SURFACES SHALL BE OF HIGH QUALITY WITHOUT SURFACE UNEVENNESS
05. UNSPECIFIED CASTING RADII = R5 MAXIMUM
06. ALL DETAILS IN VIEW "P" AND "Q" EXCEPT MELT. NO. & INSPECTION SEAL ARE TO BE CAST. HEIGHT OF CASTING LETTERS – 30 MM.
07. FINISH MACHINED DIMENSIONS ARE INDICATED WITHIN BRACKET FOR INFORMATION ONLY.
08. PERMISSIBLE DEVIATIONS OF NON TOLERANCED CASTING DIMENSIONS REFER APPLICABLE QUALITY PROCEDURE.

@ RATING	** SIZE	* MATL MARK	SL.No.	DESCRIPTION	MATL CODE	MATL SPECN	HEAT TREATMENT	SCRAP SORT	NET WT (kg)	GROSS WT (kg)	DRAWING No / COMPONENT CODE	ITEM No
300	18"	WC9	06	CASTING	–	SA 217 WC9 ATTEST	NORMALISED& TEMPERED	–	851.2	–	1.V.NJ74.05254R / 922034720000	001
400	16"	WCB	05	CASTING	–	SA 216 WCB ATTEST	NORMALISED	–	851.2	–	1.V.NJ48.05254R / 922033700000	001
300	18"	C12A	04	CASTING	–	SA 217 C12A ATTEST	NORMALISED& TEMPERED	–	851.2	–	1.V.NJ35.05254R / 922033500000	001
300	16"	WC9	03	CASTING	–	SA 217 WC9 ATTEST	NORMALISED& TEMPERED	–	851.2	–	1.V.NH63.05254R/01 / 922031770000	001
300	16"	WCC	02	CASTING	–	SA 216 WCC ATTEST	NORMALISED	–	851.2	–	1.V.NH62.05254R / 922031230000	001
300	16"	WCB	01	CASTING	–	SA 216 WCB ATTEST	NORMALISED	–	851.2	–	1.V.NH51.05254R/01 / 922030860000	001

REV	DATE	ALTERED	
06	15.06.16	K.NAVIN	CHD & APPD MS & SSK
05	23.03.15	A.MARIMUTHU	CHD & APPD MS & SSK
04	20.11.14	A.MARIMUTHU	CHD & APPD MS & SSK
03	01.10.13	DEEPAKRAJ	CHD & APPD DEEPAKRAJ & KRS
02	03.08.13	DEEPAKRAJ	CHD & APPD DEEPAKRAJ&KRS
01	11.03.13	DEEPAKRAJ	CHD & APPD M.RAJAKUMAR

SL. No. 06 INCLUDED

SL. No. 05 INCLUDED

SL. No. 04 INCLUDED

IN SL.NO. 3 MATL. CODE 922031770000 WAS 922037700000

DCP No: 801616

SL.No. 02 & 03 INCLUDED
MATL.MARK COLUMN INCLUDED

DIMENSIONS MARKED ARE ADDED.

DCP : 801479

CAUTION: The information on this document is the property of BHARAT HEAVY ELECTRICALS LTD. It must not be used directly or indirectly in any way detrimental to the interest of the company.

TYPE OF PRODUCT
OR NAME OF
CUSTOMER/PROJECT

भेल BHARAT HEAVY ELECTRICALS LTD.,
UNIT: HIGH PRESSURE BOILER PLANT.
TIRUCHIRAPALLI–620014.
365–119

	NAME	SIGN	DATE
DRN	DEEPAKRAJ		23.11.12
CHD	M.RAJAKUMAR		05.12.12
APPD	M.RAJAKUMAR		05.12.12

DEPT	SCALE	WEIGHT (KG).	REFERENCE INFORMATIONS
VL	NTS	851.2	–
CODE 320			

TITLE	CARD CODE	DRAWING NO.	REV
BODY	U 01	1–V–0000–05254R	06

Size A1

DRAWING NO. 2-V-0000-06109R

ALL DIMENSIONS ARE IN MILLIMETRES. FOR TOLERANCES OF UNTOLERANCED DIMENSIONS DURING MANUFACTURE REFER RELEVANT QCP / QP

SECTION AA

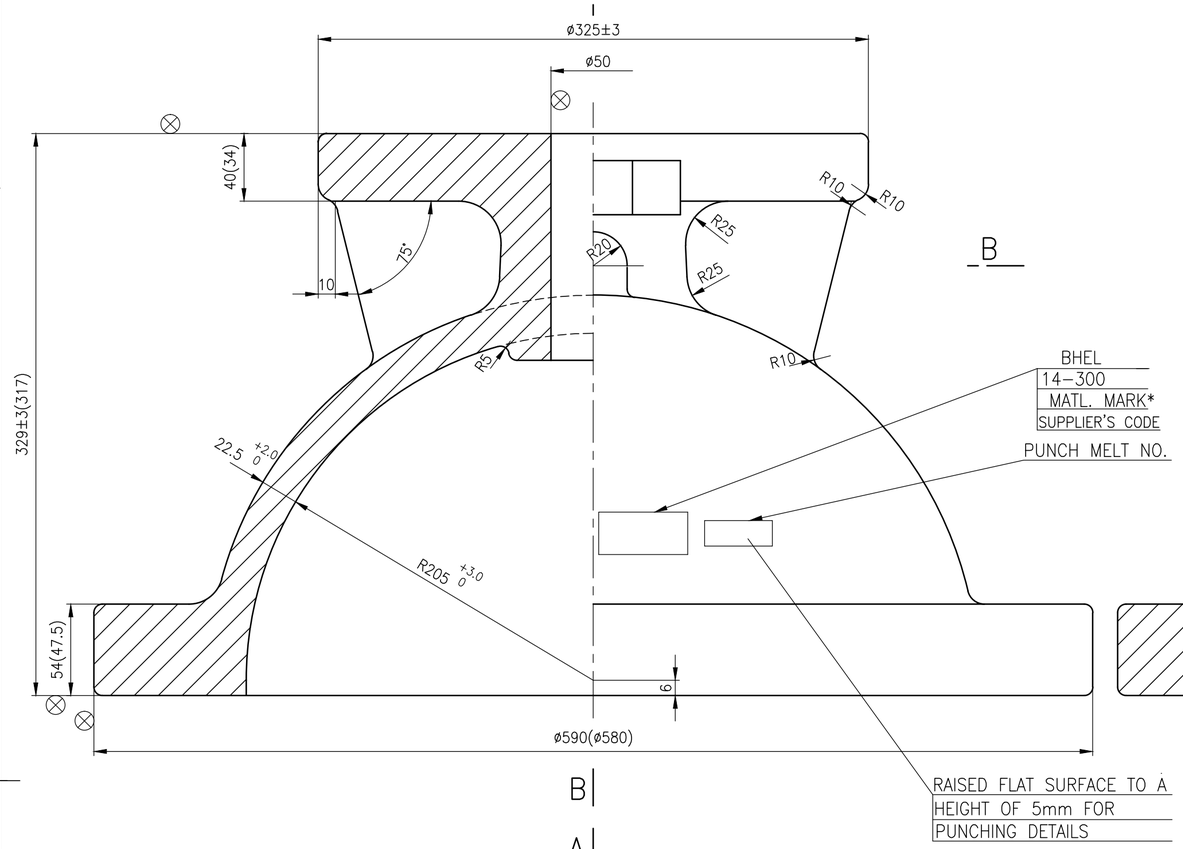

SECTION BB

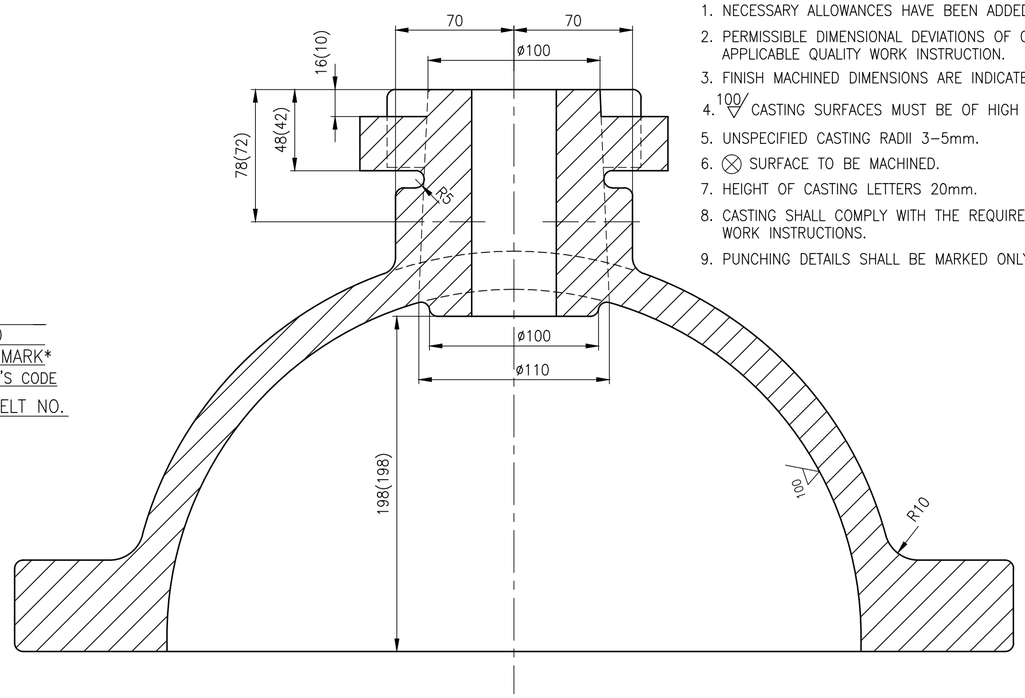

NOTES:

1. NECESSARY ALLOWANCES HAVE BEEN ADDED ON ALL MACHINABLE SURFACES
2. PERMISSIBLE DIMENSIONAL DEVIATIONS OF CASTING SURFACES REFER LATEST APPLICABLE QUALITY WORK INSTRUCTION.
3. FINISH MACHINED DIMENSIONS ARE INDICATED WITHIN BRACKETS FOR INFORMATION
4. 100 CASTING SURFACES MUST BE OF HIGH QUALITY WITHOUT SURFACE UNEVENNESS.
5. UNSPECIFIED CASTING RADII 3-5mm.
6. ⊗ SURFACE TO BE MACHINED.
7. HEIGHT OF CASTING LETTERS 20mm.
8. CASTING SHALL COMPLY WITH THE REQUIREMENTS OF LATEST APPLICABLE QUALITY WORK INSTRUCTIONS.
9. PUNCHING DETAILS SHALL BE MARKED ONLY ON RAISED FLAT SURFACE ONLY.

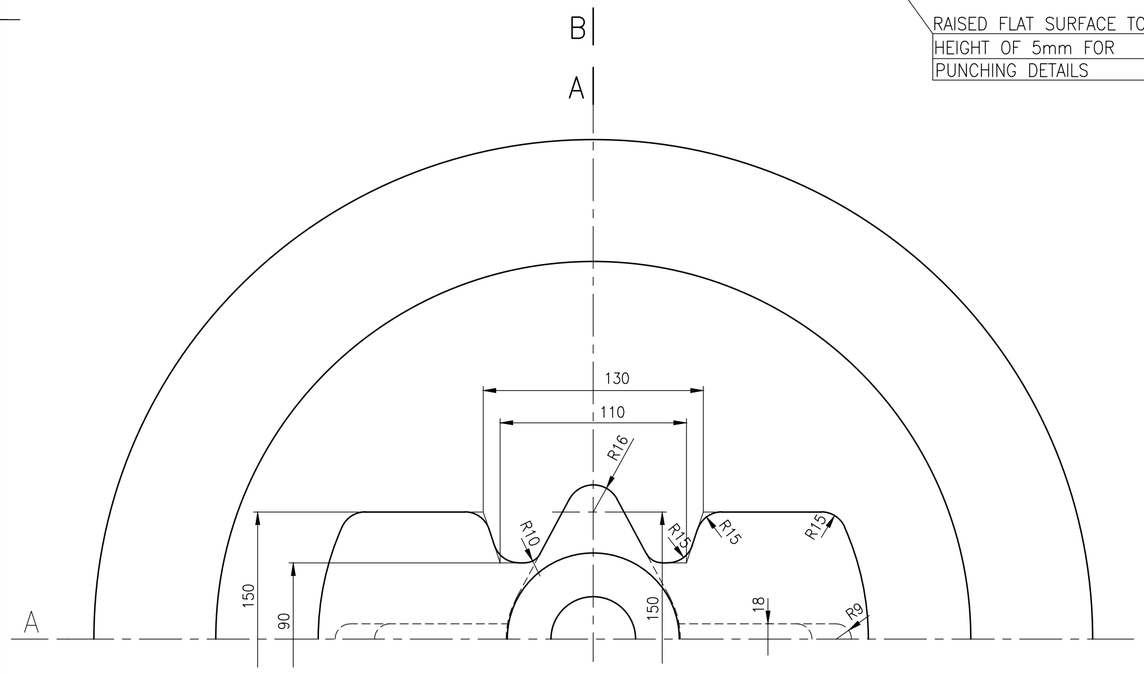

SL. No.	DRAWING No.	MATL. CODE	MATL. SPECN.	HEAT TREATMENT	GROSS WT.(Kg)	MATL. MARK
05	2-V-NH86-06109R	922032100000	ASTM A351 CF8M, CERTIFY	SH	123	CF8M
04	2-V-NG86-06109R	922030450000	ASTM A217 C12A, CERTIFY	NT	123	C12A
03	2-V-NA58-06109R	922014960000	ASTM A351 CF8, CERTIFY	SH	123	CF8
02	2-V-N622-06109R	922008480000	ASTM A217 WC9, CERTIFY	NT	123	WC9
01	2-V-N435-06109R/01	922005190000	ASTM A216 WCB, CERTIFY	NR	123	WCB

No OFF	DESCRIPTION	MATL CODE	MATL SPECN	HEAT TREATMENT	SCRAP SORT	NET WT (kg)	GROSS WT (kg)	DRAWING No	ITEM No

REV	DATE	ALTERED	REV	DATE	ALTERED	REV	DATE	ALTERED
05	01.02.14	S.SARANYA CHD & APPD S.S.K & K.R.S	04	13.06.12	M.SRINIVASAN CHD & APPD M.RAJAKUMAR	03	15.03.04	VB CHD & APPD MRK
		SL. No. 05 INCLUDED.			SL. No. 04 INCLUDED.	ZONE		SL. No.03 INCLUDED.

CAUTION: The information on this document is the property of BHARAT HEAVY ELECTRICALS LTD. It must not be used directly or indirectly in any way detrimental to the interest of the company.

TYPE OF PRODUCT OR NAME OF CUSTOMER/PROJECT: REDRAWN WITH REV.3 ON 15.03.04

BHARAT HEAVY ELECTRICALS LTD.,
UNIT: HIGH PRESSURE BOILER PLANT.
TIRUCHIRAPALLI -620014.
365-120

	NAME	SIGN	DATE	NO.OF VAR.
DRN	V.BAIRAVAN		15.03.04	
CHD	R.L.NARAYANAN		15.03.04	
APPD	M.RAJAKUMAR		15.03.04	

DEPT VL
CODE 320
SCALE 1:2.5
WEIGHT (KG).
REFERENCE INFORMATIONS
NO. OF ITEMS

TITLE: BONNET
14"/300 GV

CARD CODE: U 01

DRAWING NO. 2-V-0000-06109R

REV 05

Size A2

DRAWING NO. 2-V-0000-06111R

ALL DIMENSIONS ARE IN MILLIMETRES. FOR TOLERANCES OF UNTOLERANCED DIMENSIONS DURING MANUFACTURE REFER RELEVANT QCP / QP

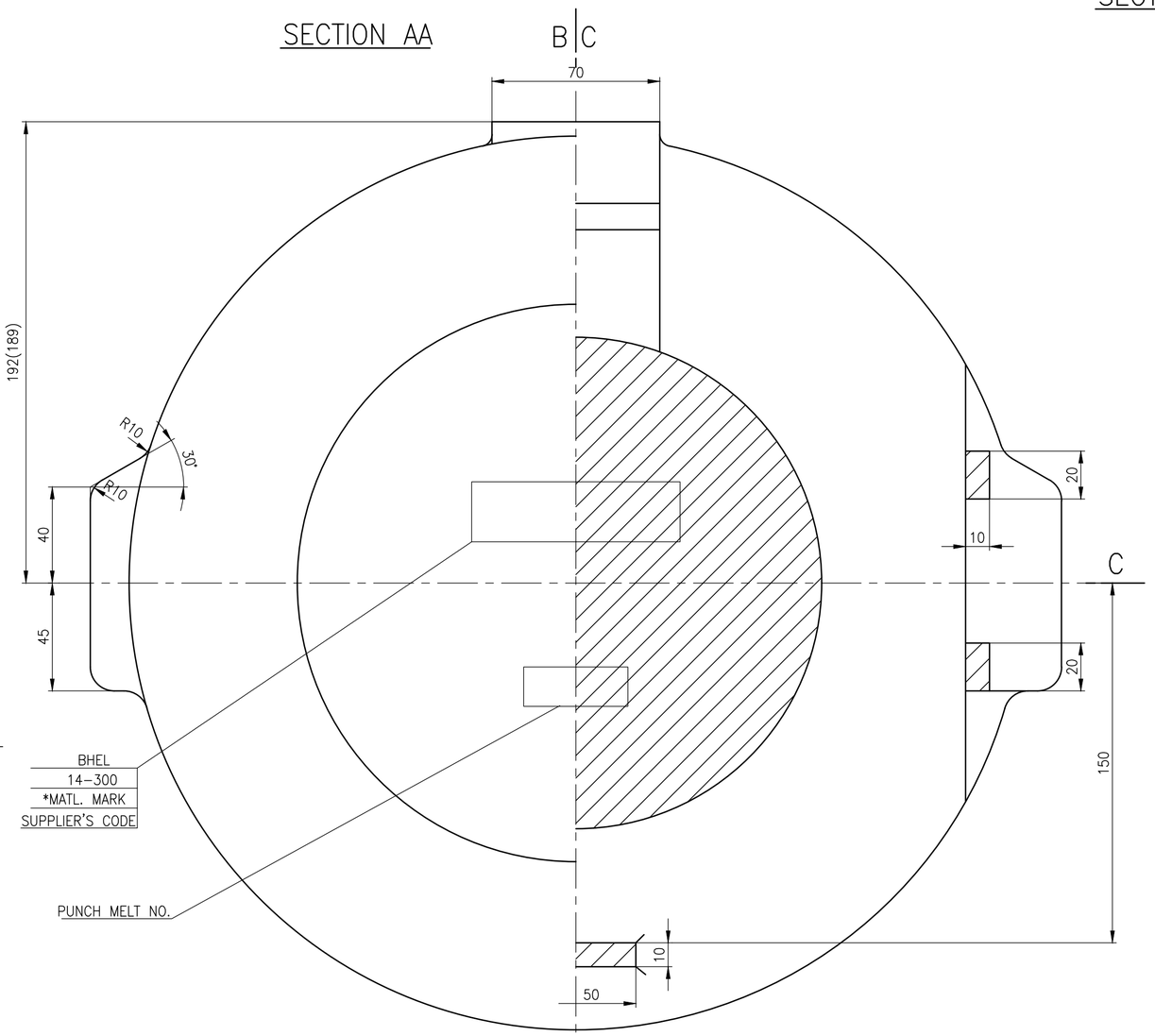

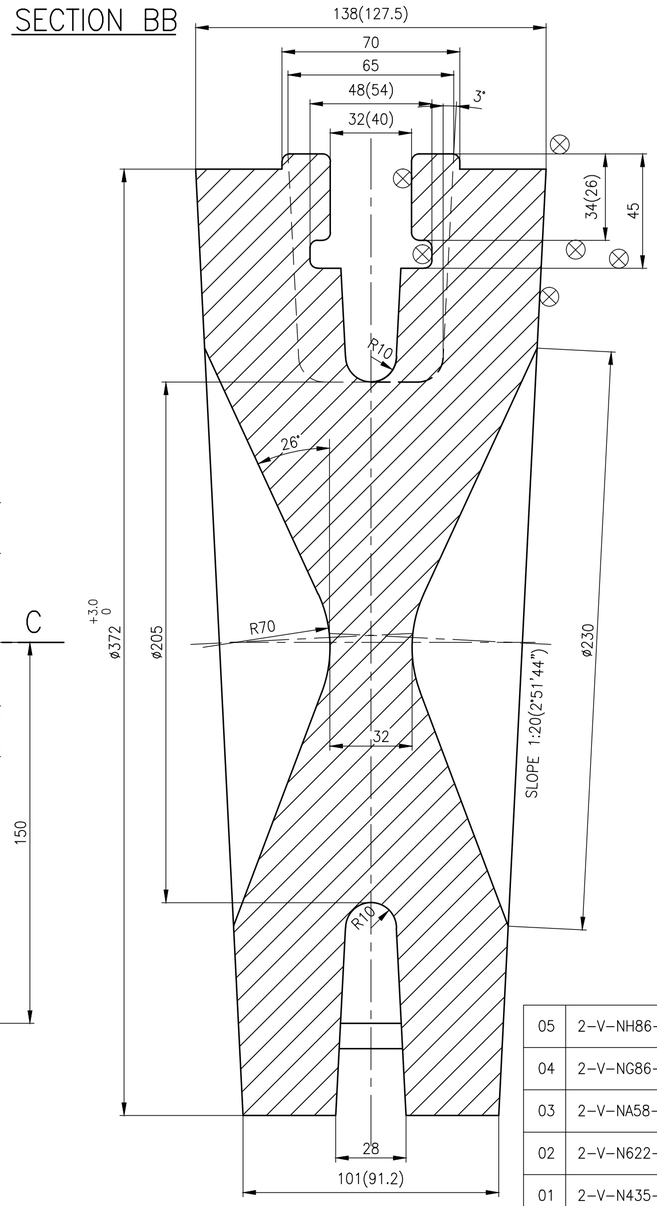

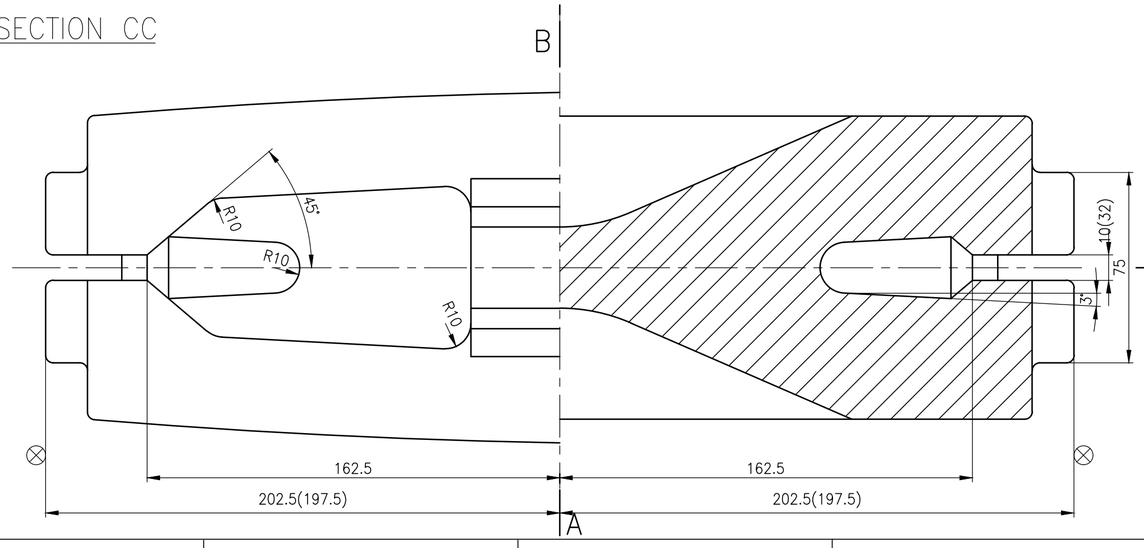

NOTES:

1. CASTING SHALL COMPLY WITH THE REQUIREMENT OF LATEST APPLICABLE QUALITY WORK INSTRUCTION IN ALL RESPECTS.
2. NECESSARY ALLOWANCES HAVE BEEN ADDED ON ALL MACHINABLE SURFACES.
3. PERMISSIBLE DIMENSIONAL DEVIATIONS OF CASTING SURFACES REFER LATEST APPLICABLE QUALITY WORK INSTRUCTION
4. FINISH MACHINED DIMENSIONS ARE INDICATED WITHIN BRACKETS FOR REFERENCE ONLY.
5. 100/ ▽ CASTING SURFACES MUST BE OF HIGH QUALITY WITHOUT SURFACE UNEVENNESS.
6. UNSPECIFIED CASTING RADII 3-5mm.
7. ⊗ SURFACE TO BE MACHINED.
8. HEIGHT OF CASTING LETTERS 20mm.

SL. No.	DRAWING No.	MATL. CODE	MATL. SPECN.	HEAT TREATMENT	GROSS WT.(Kg)	MATL. MARK
05	2-V-NH86-06111R	922032110000	ASTM A351 CF8M, CERTIFY	SH	70	CF8M
04	2-V-NG86-06111R	922030440000	ASTM A217 C12A, CERTIFY	NT	70	C12A
03	2-V-NA58-06111R	922014970000	ASTM A351 CF8, CERTIFY	SH	70	CF8
02	2-V-N622-06111R/02	922008470000	ASTM A217 WC9, CERTIFY	NT	70	WC9
01	2-V-N435-06111R/02	922005210000	ASTM A216 WCB, CERTIFY	NR	70	WCB

No OFF	DESCRIPTION	MATL CODE	MATL SPECN	HEAT TREATMENT	SCRAP SORT	NET WT (kg)	GROSS WT (kg)	DRAWING No	ITEM No

REV	DATE	ALTERED	
06	01.02.14	ALTERED	S.SARANYA
		CHD & APPD	S.S.K & K.R.S
		SL. No. 05 INCLUDED	
05	13.06.12	ALTERED	M.SRINIVASAN
		CHD & APPD	M.RAJAKUMAR
ZONE		SL. No. 04 INCLUDED.	

CAUTION: The information on this document is the property of BHARAT HEAVY ELECTRICALS LTD. It must not be used directly or indirectly in any way detrimental to the interest of the company.

TYPE OF PRODUCT OR NAME OF CUSTOMER/PROJECT: REDRAWN WITH REV.4 ON 15.03.04

BHARAT HEAVY ELECTRICALS LTD.,
UNIT: HIGH PRESSURE BOILER PLANT.
TIRUCHIRAPALLI -620014.
365-120

	NAME	SIGN	DATE	NO.OF VAR.
DRN	V.BAIRAVAN		15.03.04	
CHD	R.L.NARAYANAN		15.03.04	
APPD	M.RAJAKUMAR		15.03.04	

DEPT: VL
CODE: 320
SCALE: N T S
WEIGHT (KG): REF. TABLE
REFERENCE INFORMATIONS
NO. OF ITEMS

TITLE: WEDGE 14"/300C GV
CARD CODE: U 01
DRAWING NO.: 2-V-0000-06111R
REV: 06

Size A2

DRAWING NO. 2-V-0000-06124R

ALL DIMENSIONS ARE IN MILLIMETRES. FOR TOLERANCES OF UNTOLERANCED DIMENSIONS DURING MANUFACTURE REFER RELEVANT QCP / QP

SECTION AA

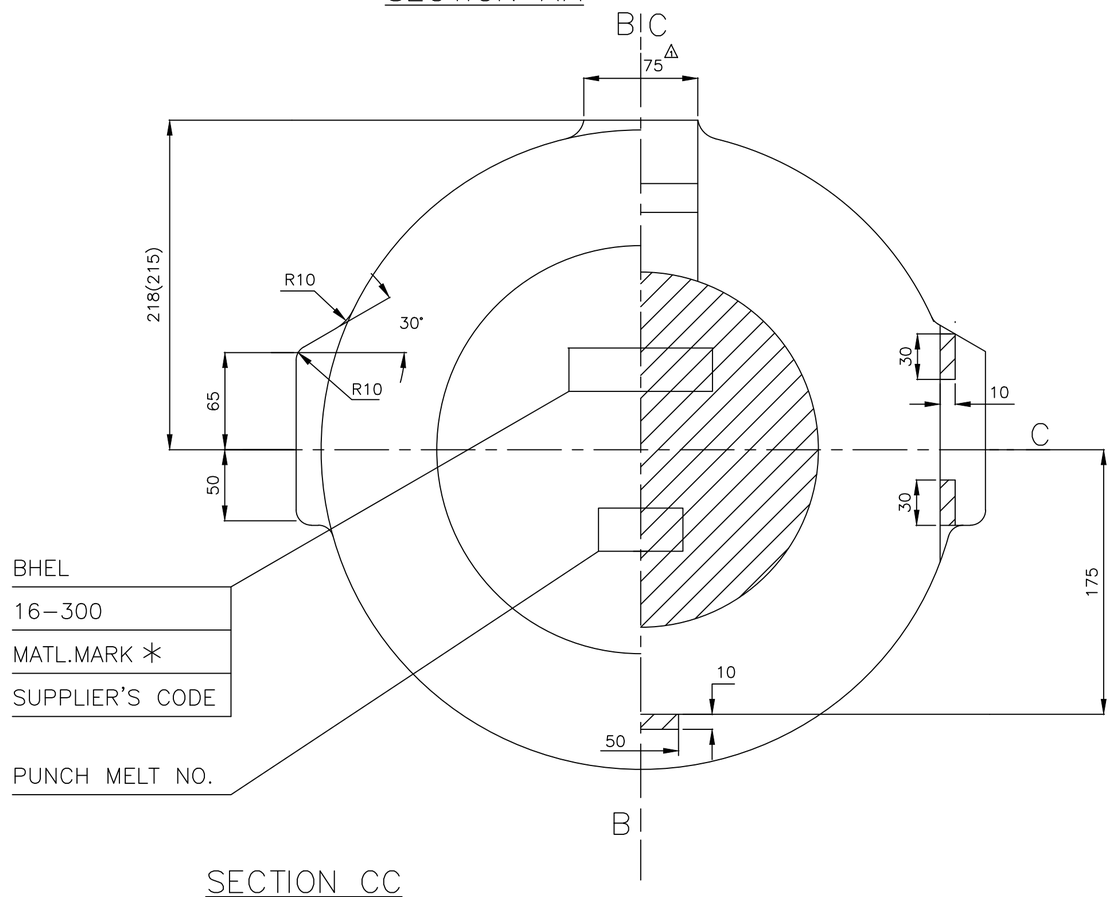

SECTION BB

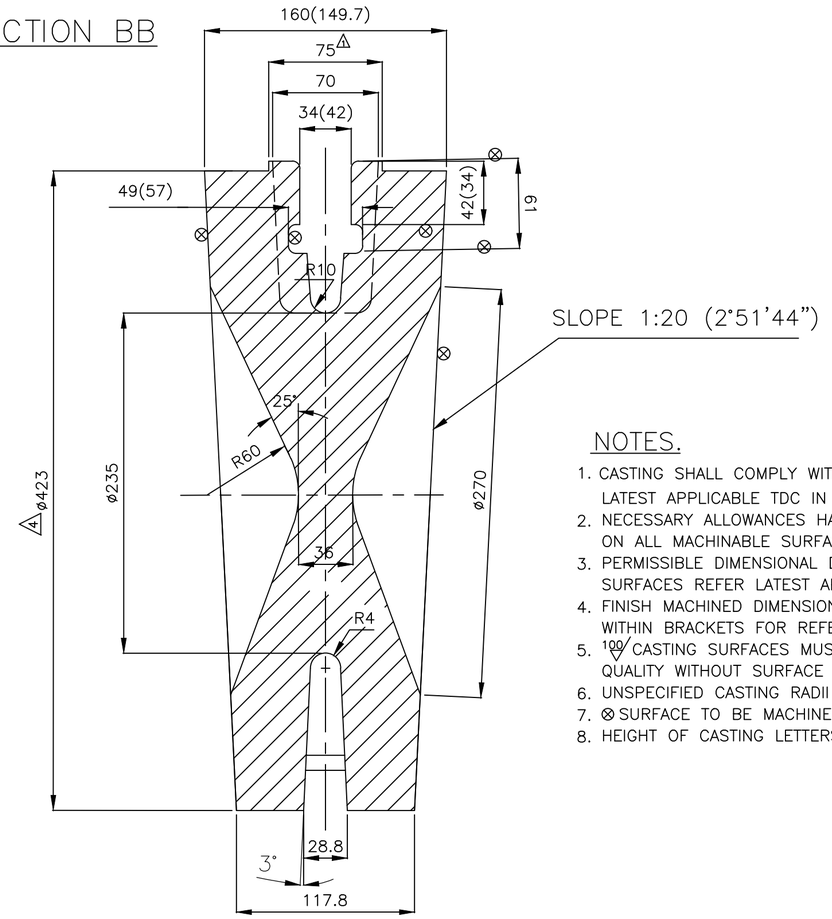

NOTES.

1. CASTING SHALL COMPLY WITH THE REQUIRMENT LATEST APPLICABLE TDC IN ALL RESPECTS.
2. NECESSARY ALLOWANCES HAVE BEEN ADDED ON ALL MACHINABLE SURFACES.
3. PERMISSIBLE DIMENSIONAL DEVIATIONS OF CASTING SURFACES REFER LATEST APPLICABLE TDC.
4. FINISH MACHINED DIMENSIONS ARE INDICATED WITHIN BRACKETS FOR REFERENCE ONLY.
5. 100 CASTING SURFACES MUST BE OF HIGH QUALITY WITHOUT SURFACE UNEVENNESS.
6. UNSPECIFIED CASTING RADII 3–5.
7. ⊗ SURFACE TO BE MACHINED.
8. HEIGHT OF CASTING LETTERS 20MM.

SECTION CC

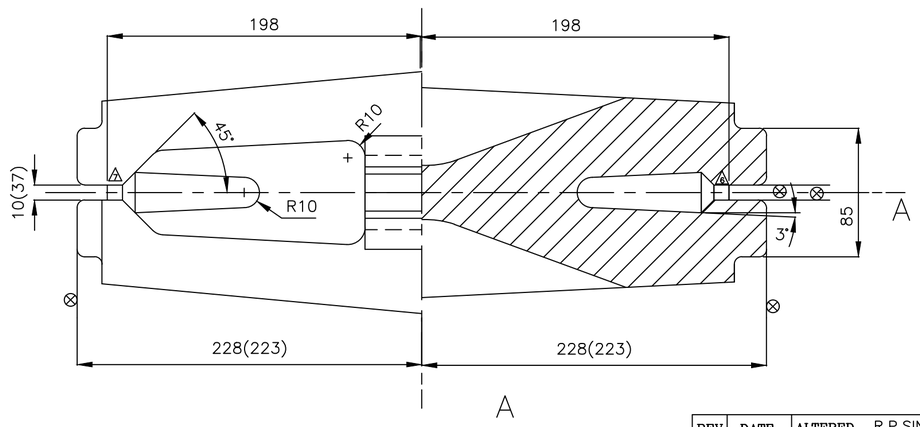

MATL. MARK * TOBE CAST	SL. No.	DESCRIPTION	MATL CODE	MATL SPECN	HEAT TREATMENT	SCRAP SORT	NET WT (kg)	GROSS WT (kg)	DRAWING No / COMPONENT CODE	ITEM No
C12A	03	CASTING	–	SA217 C12A CERTIFY	N&T	–	120	–	2.V.NJ26.06124R/2 922033230000	007
WC9	02	CASTING	–	SA217 WC9 CERTIFY	N&T	–	120	–	2.V.N616.06124R/04 922008420000	007
WCB	01	CASTING	–	SA216 WCB CERTIFY	NR	–	120	–	2.V.N436.06124R/05 922005330000	007

REV	DATE	ALTERED	
07	26.02.19	R.P.SINGH CHD & APPD SSK & KRS	DRAWING UPDATED.
06	06.02.19	R.P.SINGH CHD & APPD SSK & KRS	DRAWING UPDATED.
05	26.09.14	A.MARIMUTHU CHD & APPD MS & SSK	SL. No. 03 INCLUDED
04	28.11.2000	RL CHD & APPD MRK	DIM. ø423 $^{+3}_{0}$ WAS ø423. DCN No. HM.0478
03	23.03.99	RL CHD & APPD MRK	DIM. 65WAS 85. DIM. 30° INCLUDED DCN No. HM.0383
02	11.01.97	RL CHD & APPD MRK	SL. No. 02 INCLUDED. DCN No. HM.0293
01	17.08.96	R.L CHD & APPD M.R.K	75x75 SQUARG WAS ø75. DCN No. HM0196

ZONE

CAUTION: The information on this document is the property of BHARAT HEAVY ELECTRICALS LTD. It must not be used directly or indirectly in any way detrimental to the interest of the company.

TYPE OF PRODUCT
OR NAME OF
CUSTOMER/PROJECT

BHARAT HEAVY ELECTRICALS LTD.,
UNIT: HIGH PRESSURE BOILER PLANT.
TIRUCHIRAPALLI -620014.
365–120

	NAME	SIGN	DATE	NO.OF VAR.
DRN	R.V.BAIRAVAN		23.01.96	
CHD	R.L.NARAYANAN		31.01.96	
APPD	M.RAJAKUMAR		09.02.96	

DEPT VL
CODE 320
SCALE NTS
WEIGHT (KG). 120.0
REFERENCE INFORMATIONS
NO. OF ITEMS

TITLE: WEDGE 16"/300C GV
CARD CODE U 01
DRAWING NO. 2-V-0000-06124R
REV 07

Size A2

DRAWING NO. 2-V-0000-14082R

ALL DIMENSIONS ARE IN MILLIMETRES. FOR TOLERANCES OF UNTOLERANCED DIMENSIONS DURING MANUFACTURE REFER RELEVANT QCP / QP

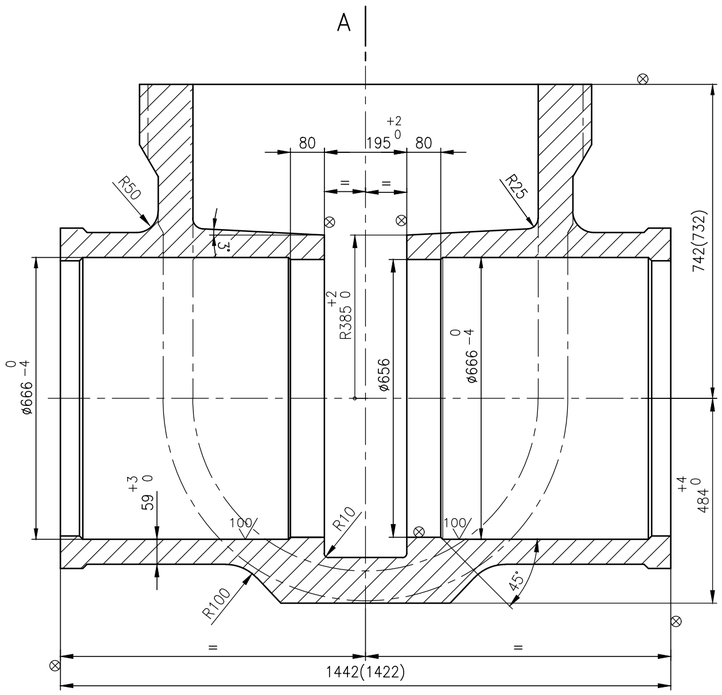

SECTION–BB

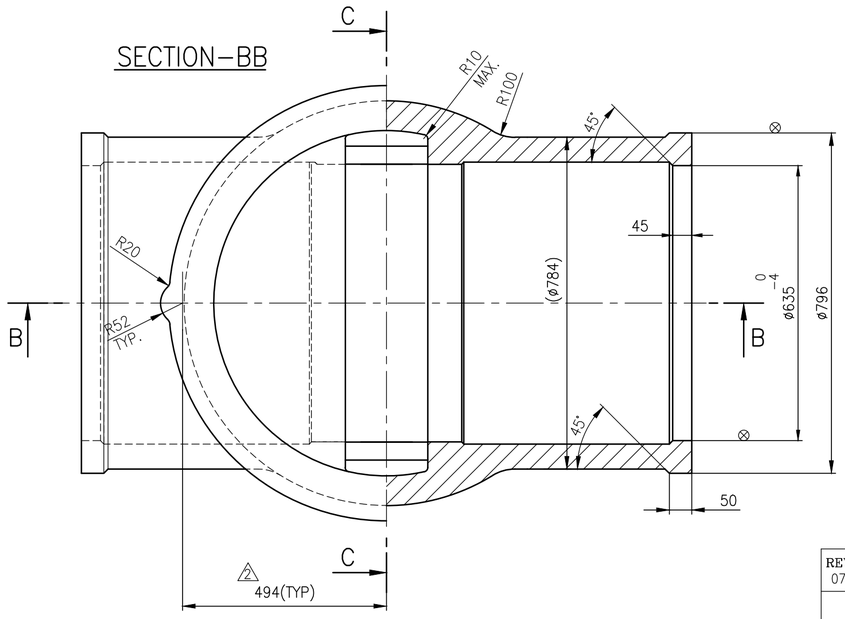

SECTION–AA

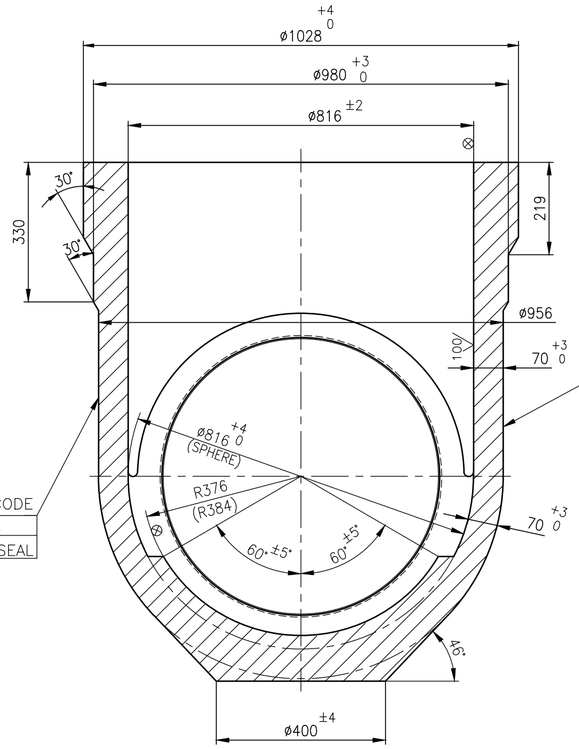

SECTION–CC

BHEL 750MM–C500 WCC	FOR WCC MATL. SL.No. 01	
BHEL 750MM–C900 WC9	FOR WC9 MATL. SL.No. 02	
BHEL 750MM–C900 C12A	FOR C12A MATL. SL.No. 03	
BHEL 750MM–C900SPL C12A	FOR C12A MATL. SL.No. 04	
BHEL 750MM–C600 WCC	FOR WCC MATL. SL.No. 05	

100

NOTE

01. NECESSARY MACHINING ALLOWANCES HAVE BEEN ADDED ON ALL MACHINABLE SURFACES.
02. PERMISSIBLE DEVIATIONS OF NON TOLERANCED CASTING DIMENSIONS REFER APPLICABLE LATEST QUALITY PROCEDURE.
03. FINISH MACHINED DIMENSIONS ARE INDICATED WITHIN BRACKETS FOR INFORMATION ONLY.
04. LETTERS– BHEL,SIZE,MATL.& SUPPLIERS CODE ARE TO BE CAST IN THE INDICATED ZONE.
05. CASTING SHALL COMPLY WITH THE REQUIREMENTS OF APPLICABLE LATEST QUALITY PROCEDURE.
06. UNSPECIFIED CASTING RADII = R3 TO R5
07. HEIGHT OF CASTING LETTERS = 25 mm
08. ⊗ INDICATES SURFACE TO BE MACHINED.
09. 100 INDICATED CASTING SURFACES SHALL BE OF HIGH QUALITY WITHOUT SURFACE UNEVENNESS.
10. IT SHALL BE ENSURED THAT THE TEMPLATE AS PER DRG. No. 4–V–3245–26701 ENTERS FREELY FROM THE TOP OF THE BODY AND RESTS ON THE PAD OF R376 WITHOUT ANY INTERFERENCE.

** 11. QUALITY PROCEDURE AS APPLICABLE TO SPECIAL CLASS VALVE

SL No.	DESCRIPTION	MATL CODE	MATL SPECN	HEAT TREATMENT	SCRAP SORT	NET WT (kg)	GROSS WT (kg)	DRAWING No / COMPONENT CODE	ITEM No
05	CASTING	–	SA 216 WCC–ATTEST	NORMALISED	–	2775	–	2V339314082R/2 922032460000	–
04	CASTING	–	SA 217 C12A–ATTEST	NORMALISED &TEMPERED	–	2775	–	2V331314082R/2 922031680000	–
03	CASTING	–	SA 217 C12A–ATTEST	NORMALISED &TEMPERED	–	2775	–	2V331614082R/3 922018740000	–
02	CASTING	–	SA 217 WC9–ATTEST	NORMALISED &TEMPERED	–	2775	–	2V324514082R/4 922016400000	–
01	CASTING	–	SA 216 WCC–ATTEST	NORMALISED	–	2775	–	2V331514082R/3 922018730000	–

** 05, 04

REV	DATE	ALTERED	SELVAM	REV	DATE	ALTERED	S.SARANYA	REV	DATE	ALTERED	M.S
05	31.07.15	CHD & APPD	MS & SSK	04	15.03.14	CHD & APPD	SSK & KRS	03	30.09.13	CHD & APPD	SSK & KRS
TEST COLLAR INCLUDED DIMENSION ø635 WAS ø650 DCP:801971				SL.No. 05 INCLUDED				SL.No. 04 INCLUDED			

REV	DATE	ALTERED	SELVAM	REV	DATE	ALTERED	SELVAM
07	28.03.16	CHD & APPD	MS & SSK	06	23.03.16	CHD & APPD	MS & SSK
TEST COLLAR REMOVED DCP:802100				TEST COLLAR REMOVED FOR SA217 C12A MATERIAL. DCP:802098			

REV	DATE	ALTERED	M.SRINIVASAN	REV	DATE	ALTERED	M.SRINIVASAN
02	09.09.11	CHD & APPD	M.RAJAKUMAR	01	02.11.09	CHD & APPD	M.RAJAKUMAR
2 DIMENSION ø650, 45 & 494 WERE ø570, 300 & 482 RESPLY. DCP: 801226				ZONE DIMENSION ø828 & 295 REMOVED DRAWING Nos. 2.V.3315.14082R AND 2.V.3316.14082R INCLUDED.			

CAUTION: The information on this document is the property of BHARAT HEAVY ELECTRICALS LTD. It must not be used directly or indirectly in any way detrimental to the interest of the company.

TYPE OF PRODUCT
OR NAME OF
CUSTOMER/PROJECT

BHARAT HEAVY ELECTRICALS LTD.,
UNIT: HIGH PRESSURE BOILER PLANT.
TIRUCHIRAPALLI -620014.
365–120

	NAME	SIGN	DATE	NO.OF VAR.
DRN	M.SRINIVASAN		07.03.07	
CHD	P.BOOMINATHAN		07.03.07	
APPD	M.RAJAKUMAR		07.03.07	

DEPT VL
CODE 320
SCALE NTS
WEIGHT (KG). REF. TABLE
REFERENCE INFORMATIONS CAD: F214082R
NO. OF ITEMS

TITLE BODY (750mm)
CARD CODE U 01
DRAWING NO. 2–V–0000–14082R
REV 07

Size A2

DRAWING NO. 2-V-0000-14082R

ALL DIMENSIONS ARE IN MILLIMETRES. FOR TOLERANCES OF UNTOLERANCED DIMENSIONS DURING MANUFACTURE REFER RELEVANT QCP / QP

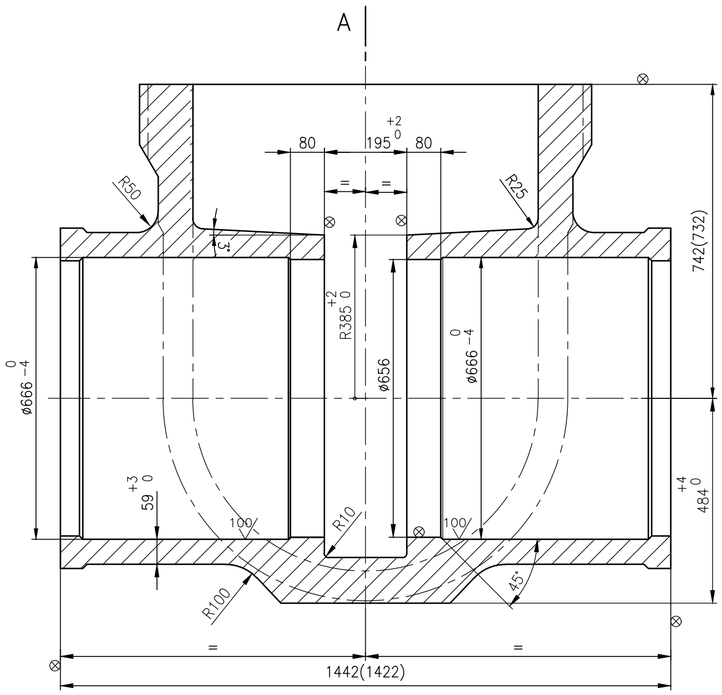

SECTION–BB

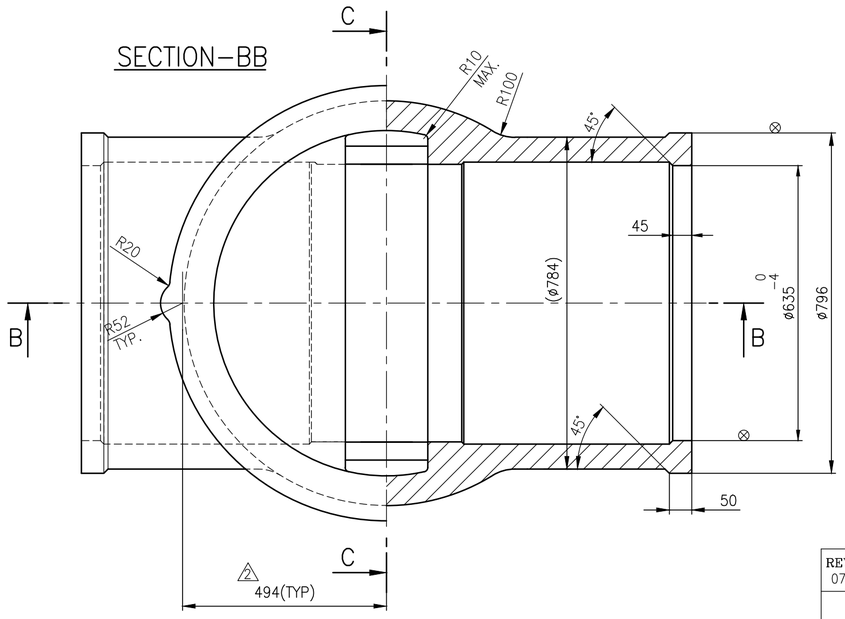

SECTION–AA

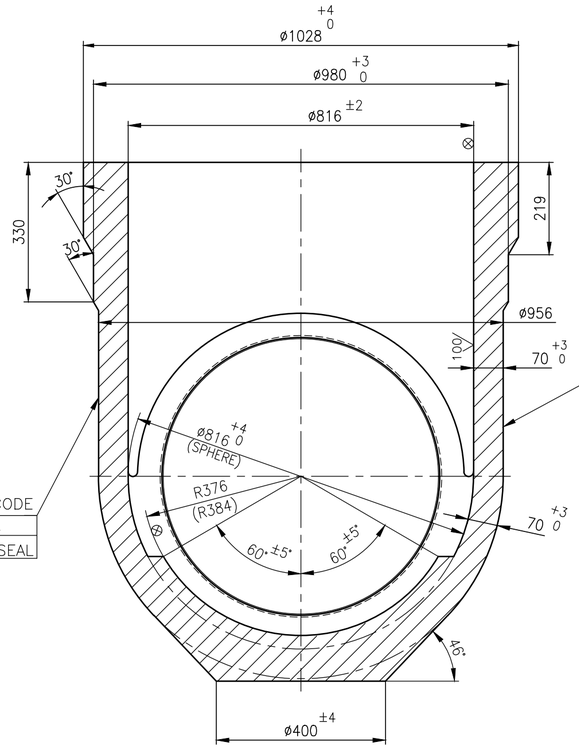

SECTION–CC

BHEL 750MM–C500 WCC	FOR WCC MATL. SL.No. 01	
BHEL 750MM–C900 WC9	FOR WC9 MATL. SL.No. 02	
BHEL 750MM–C900 C12A	FOR C12A MATL. SL.No. 03	
BHEL 750MM–C900SPL C12A	FOR C12A MATL. SL.No. 04	
BHEL 750MM–C600 WCC	FOR WCC MATL. SL.No. 05	

100

NOTE

01. NECESSARY MACHINING ALLOWANCES HAVE BEEN ADDED ON ALL MACHINABLE SURFACES.
02. PERMISSIBLE DEVIATIONS OF NON TOLERANCED CASTING DIMENSIONS REFER APPLICABLE LATEST QUALITY PROCEDURE.
03. FINISH MACHINED DIMENSIONS ARE INDICATED WITHIN BRACKETS FOR INFORMATION ONLY.
04. LETTERS– BHEL,SIZE,MATL.& SUPPLIERS CODE ARE TO BE CAST IN THE INDICATED ZONE.
05. CASTING SHALL COMPLY WITH THE REQUIREMENTS OF APPLICABLE LATEST QUALITY PROCEDURE.
06. UNSPECIFIED CASTING RADII = R3 TO R5
07. HEIGHT OF CASTING LETTERS = 25 mm
08. ⊗ INDICATES SURFACE TO BE MACHINED.
09. 100 INDICATED CASTING SURFACES SHALL BE OF HIGH QUALITY WITHOUT SURFACE UNEVENNESS.
10. IT SHALL BE ENSURED THAT THE TEMPLATE AS PER DRG. No. 4–V–3245–26701 ENTERS FREELY FROM THE TOP OF THE BODY AND RESTS ON THE PAD OF R376 WITHOUT ANY INTERFERENCE.

** 11. QUALITY PROCEDURE AS APPLICABLE TO SPECIAL CLASS VALVE

SL No.	DESCRIPTION	MATL CODE	MATL SPECN	HEAT TREATMENT	SCRAP SORT	NET WT (kg)	GROSS WT (kg)	DRAWING No / COMPONENT CODE	ITEM No
05	CASTING	–	SA 216 WCC–ATTEST	NORMALISED	–	2775	–	2V339314082R/2 922032460000	–
04	CASTING	–	SA 217 C12A–ATTEST	NORMALISED &TEMPERED	–	2775	–	2V331314082R/2 922031680000	–
03	CASTING	–	SA 217 C12A–ATTEST	NORMALISED &TEMPERED	–	2775	–	2V331614082R/3 922018740000	–
02	CASTING	–	SA 217 WC9–ATTEST	NORMALISED &TEMPERED	–	2775	–	2V324514082R/4 922016400000	–
01	CASTING	–	SA 216 WCC–ATTEST	NORMALISED	–	2775	–	2V331514082R/3 922018730000	–

** 05, 04

REV	DATE	ALTERED	SELVAM	REV	DATE	ALTERED	S.SARANYA	REV	DATE	ALTERED	M.S
05	31.07.15	CHD & APPD	MS & SSK	04	15.03.14	CHD & APPD	SSK & KRS	03	30.09.13	CHD & APPD	SSK & KRS
TEST COLLAR INCLUDED DIMENSION ø635 WAS ø650 DCP:801971				SL.No. 05 INCLUDED				SL.No. 04 INCLUDED			

REV	DATE	ALTERED	SELVAM	REV	DATE	ALTERED	SELVAM
07	28.03.16	CHD & APPD	MS & SSK	06	23.03.16	CHD & APPD	MS & SSK
TEST COLLAR REMOVED DCP:802100				TEST COLLAR REMOVED FOR SA217 C12A MATERIAL. DCP:802098			

REV	DATE	ALTERED	M.SRINIVASAN	REV	DATE	ALTERED	M.SRINIVASAN
02	09.09.11	CHD & APPD	M.RAJAKUMAR	01	02.11.09	CHD & APPD	M.RAJAKUMAR
2 DIMENSION ø650, 45 & 494 WERE ø570, 300 & 482 RESPLY. DCP: 801226				ZONE DIMENSION ø828 & 295 REMOVED DRAWING Nos. 2.V.3315.14082R AND 2.V.3316.14082R INCLUDED.			

CAUTION: The information on this document is the property of BHARAT HEAVY ELECTRICALS LTD. It must not be used directly or indirectly in any way detrimental to the interest of the company.

TYPE OF PRODUCT
OR NAME OF
CUSTOMER/PROJECT

BHARAT HEAVY ELECTRICALS LTD.,
UNIT: HIGH PRESSURE BOILER PLANT.
TIRUCHIRAPALLI -620014.
365–120

	NAME	SIGN	DATE	NO.OF VAR.
DRN	M.SRINIVASAN		07.03.07	
CHD	P.BOOMINATHAN		07.03.07	
APPD	M.RAJAKUMAR		07.03.07	

DEPT VL
CODE 320
SCALE NTS
WEIGHT (KG). REF. TABLE
REFERENCE INFORMATIONS CAD: F214082R
NO. OF ITEMS

TITLE BODY (750mm)
CARD CODE U 01
DRAWING NO. 2–V–0000–14082R
REV 07

Size A2

DRAWING NO. 2-V-0000-14547R

ALL DIMENSIONS ARE IN MILLIMETRES. FOR TOLERANCES OF UNTOLERANCED DIMENSIONS DURING MANUFACTURE REFER RELEVANT QCP / QP

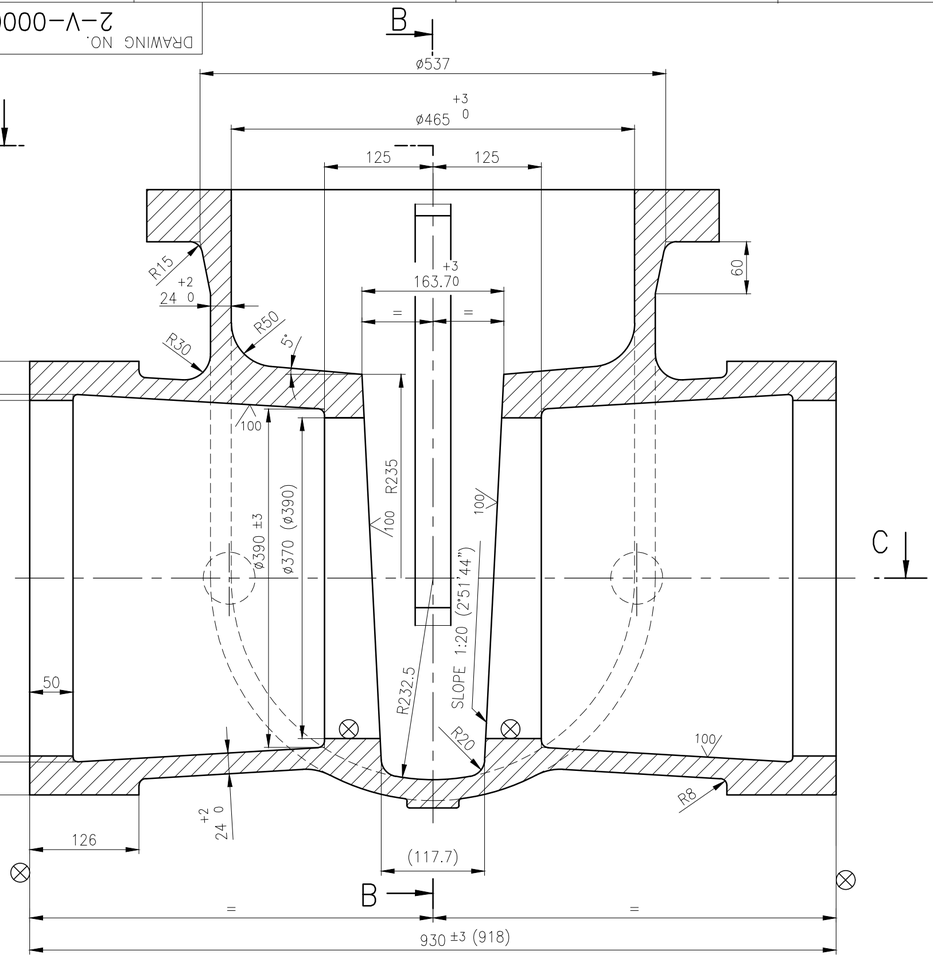

SECTION–AA

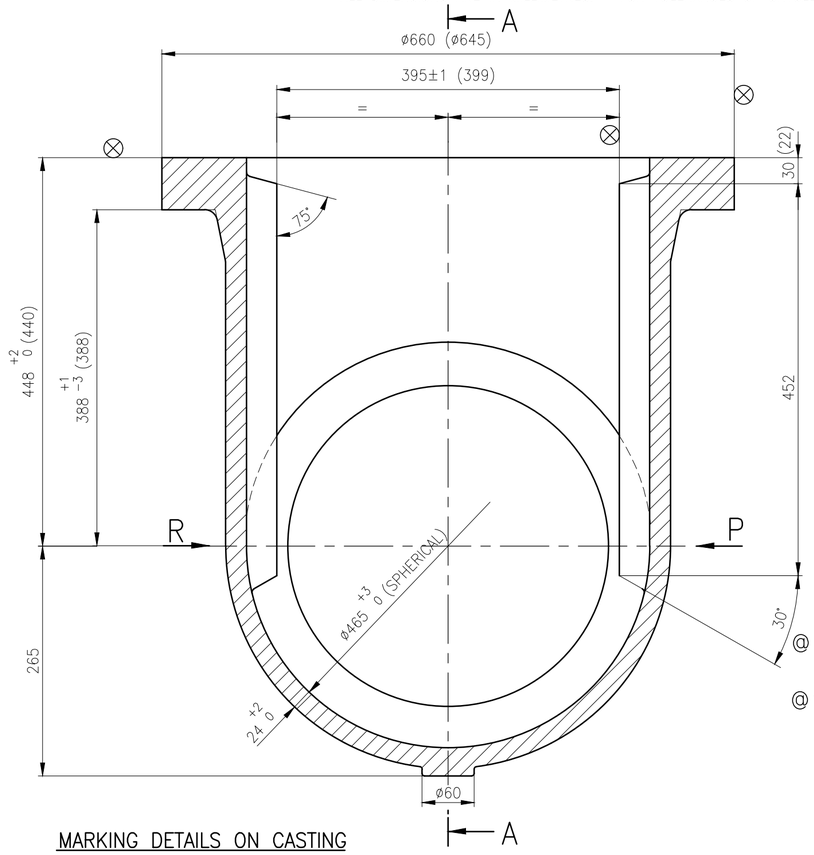

SECTION–BB

NOTES

1. NECESSARY MACHINING ALLOWANCES HAVE BEEN ADDED ON ALL MACHINABLE SURFACES.
2. ⊗ THIS MARK INDICATES THE SURFACES TO BE MACHINED.
3. UNSPECIFIED CASTING RADII–R5 MAX.
4. FOR PERMISSIBLE DIMENSIONAL DEVIATIONS OF NON TOLERANCED CASTING DIMENSIONS REFER LATEST APPLICABLE QUALITY PROCEDURE
5. CASTING SHALL GENERALLY COMPLY WITH THE REQUIREMENTS OF LATEST APPLICABLE QUALITY PROCEDURE IN ALL RESPECTS.
6. 100/ INDICATES THE CASTING SURFACES WHICH MUST BE OF HIGH QUALITY WITHOUT SURFACE UNEVENNESS
7. FINISH MACHINED DIMENSIONS ARE INDICATED WITHIN BRACKETS FOR INFORMATION ONLY,.
8. PUNCHING DETAILS SHALL BE MARKED ONLY ON RAISED FLAT SURFACE SHOWN IN VIEW P&R
9. HEIGHT OF CASTING LETTERS –30mm.
10. @ THIS SPECIAL CLASS CASTING IS TO BE SUBJECTED RT/UT ON ALL CRITICAL LOCATIONS.
11. @ ALL EXTERIOR AND ACCESSIBLE INTERIOR SURFACES OF BODY SHALL BE MPI/LPI TESTED.

MARKING DETAILS ON CASTING

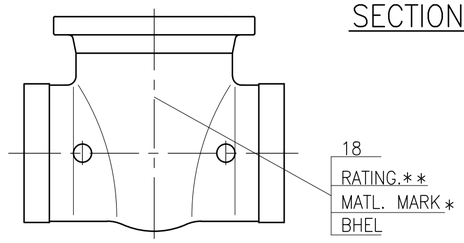

VIEW P

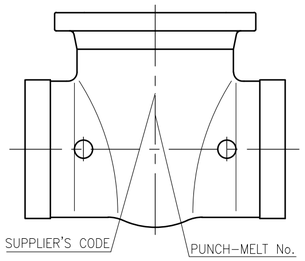

VIEW R

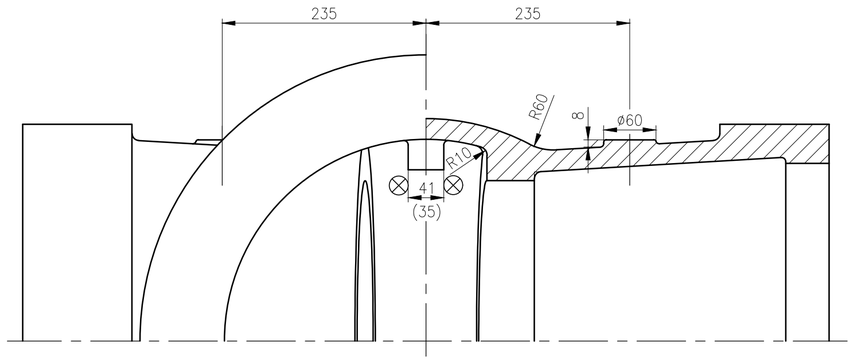

SECTION–CC

	RATING **	MATL.MARK*	SL. No.	DESCRIPTION	MATL CODE	MATL SPECN	HEAT TREATMENT	SCRAP SORT	NET WT (kg)	GROSS WT (kg)	DRAWING No / COMPONENT CODE	ITEM No
@	300 SPL	WC9	05	CASTING	–	SA 217 WC9 ATTEST	NORMALISED & TEMPERED	–	465	–	2–V–NK56–14547R / 92 203 832 0000	001
	300	C12A	04	CASTING	–	SA217 C12A ATTEST	NORMALISED & TEMPERED	–	465	–	2–V–NJ26–14547R / 92 203 321 0000	001
@	300 SPL	WCB	03	CASTING	–	SA 216 WCB ATTEST	NORMALISED	–	465	–	2–V–NG64–14547R / 92 202 083 0000	001
	300	WC9	02	CASTING	–	SA 217 WC9 ATTEST	NORMALISED & TEMPERED	–	465	–	2–V–NG65–14547R / 92 202 084 0000	001
	300	WCB	01	CASTING	–	SA 216 WCB ATTEST	NORMALISED	–	465	–	2–V–NG24–14547R / 92 201 987 0000	001

REV	DATE	ALTERED	REV	DATE	ALTERED	REV	DATE	ALTERED	REV	DATE	ALTERED
04	31.12.18	R.P.SINGH CHD & APPD SSK & KRS	03	25.09.14	A.MARIMUTHU CHD & APPD MS & SSK	02	03.08.11	M.SRINIVASAN CHD & APPD M.RAJAKUAMR	01	28.07.11	M.SRINIVASAN CHD & APPD M.RAJAKUAMR
		SL.NO. 05 INCLUDED			SL. NO. 04 INCLUDED.	ZONE		SL. NO. 03 INCLUDED.	ZONE		SL. NO. 02 INCLUDED.

CAUTION: The information on this document is the property of BHARAT HEAVY ELECTRICALS LTD. It must not be used directly or indirectly in any way detrimental to the interest of the company.

TYPE OF PRODUCT
OR NAME OF
CUSTOMER/PROJECT

BHARAT HEAVY ELECTRICALS LTD.,
UNIT: HIGH PRESSURE BOILER PLANT.
TIRUCHIRAPALLI -620014.
365–120

	NAME	SIGN	DATE	NO.OF VAR.
DRN	P.B.MAHES		04.03.10	
CHD	M.SRINIVASAN		04.03.10	
APPD	M.RAJAKUAMR		04.03.10	

DEPT VL
CODE 320
SCALE NTS
WEIGHT (KG). REF. TABLE
REFERENCE INFORMATIONS
CAD :C214547R
NO. OF ITEMS

TITLE
BODY
(18" – 300CL – BW)

CARD CODE U 01

DRAWING NO. 2–V–0000–14547R

REV 04

Size A2

DRAWING NO. 2-V-0000-14815R

ALL DIMENSIONS ARE IN MILLIMETRES. FOR TOLERANCES OF UNTOLERANCED DIMENSIONS DURING MANUFACTURE REFER RELEVANT QCP / QP

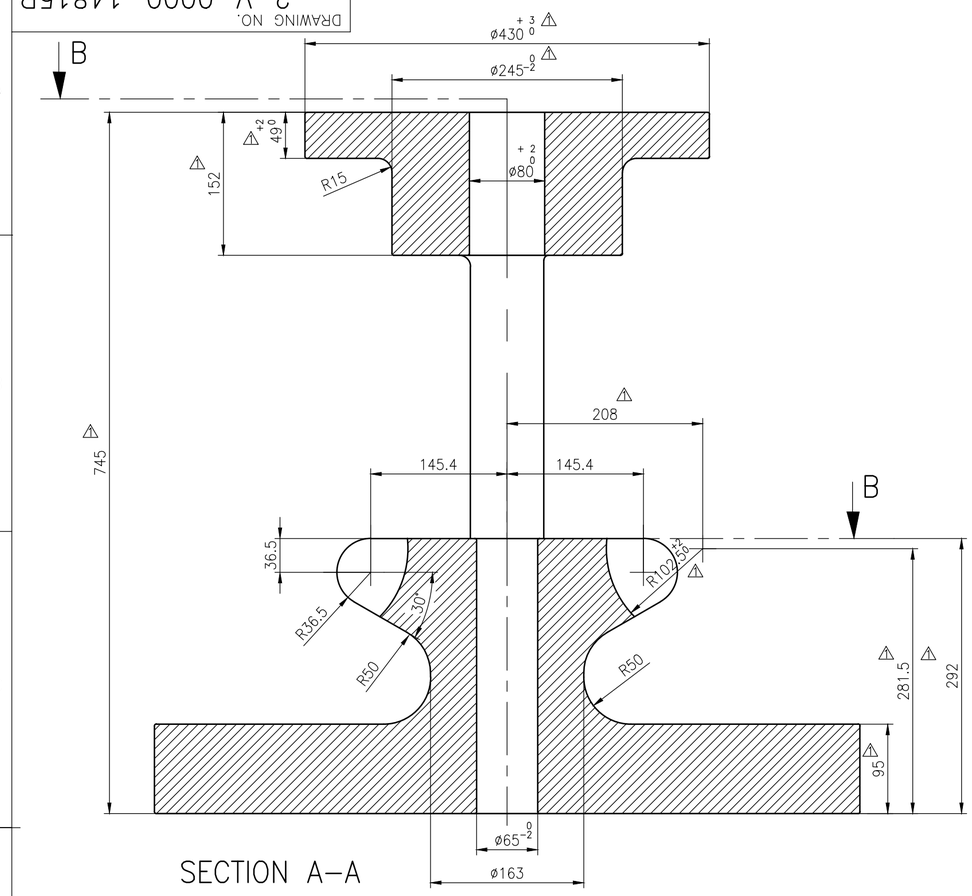

SECTION A–A

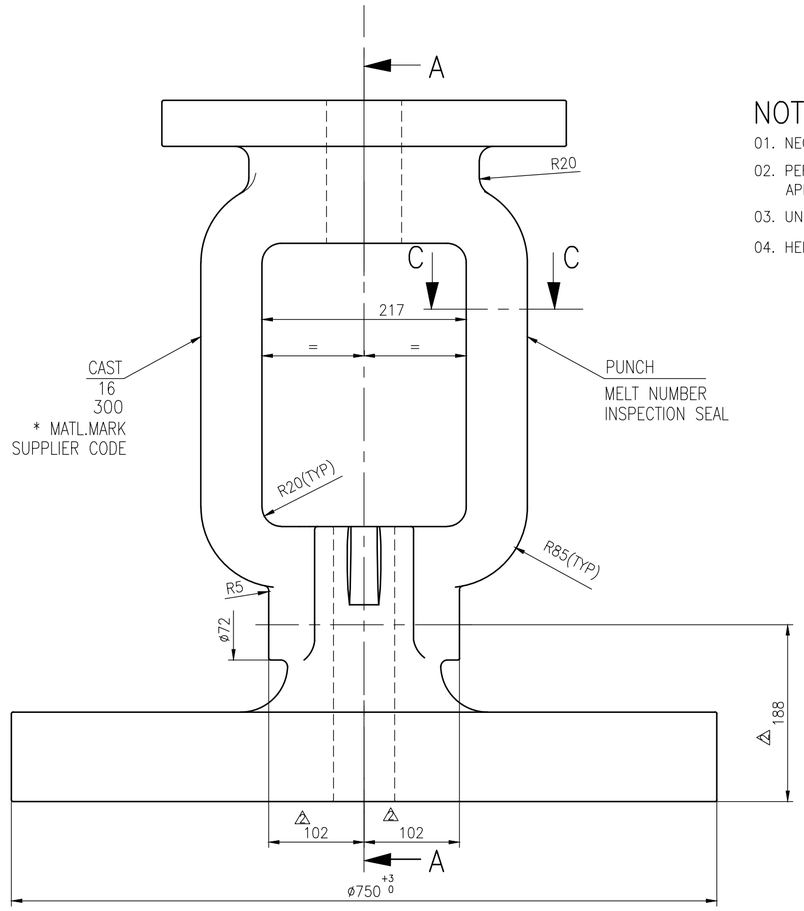

NOTES:–

01. NECESSARY ALLOWANCE HAVE BEEN ADDED ON ALL MACHINABLE SURFACES.
02. PERMISSIBLE DIMENSIONAL DEVIATION OF CASTING SURFACE REFER LATEST APPLICAPLE QUALITY PROCEDURE.
03. UNSPECIFIED CASTING RAD 3–5 MM
04. HEIGHT OF CASTING LETTERS 25 MM

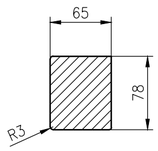

SECTION C–C

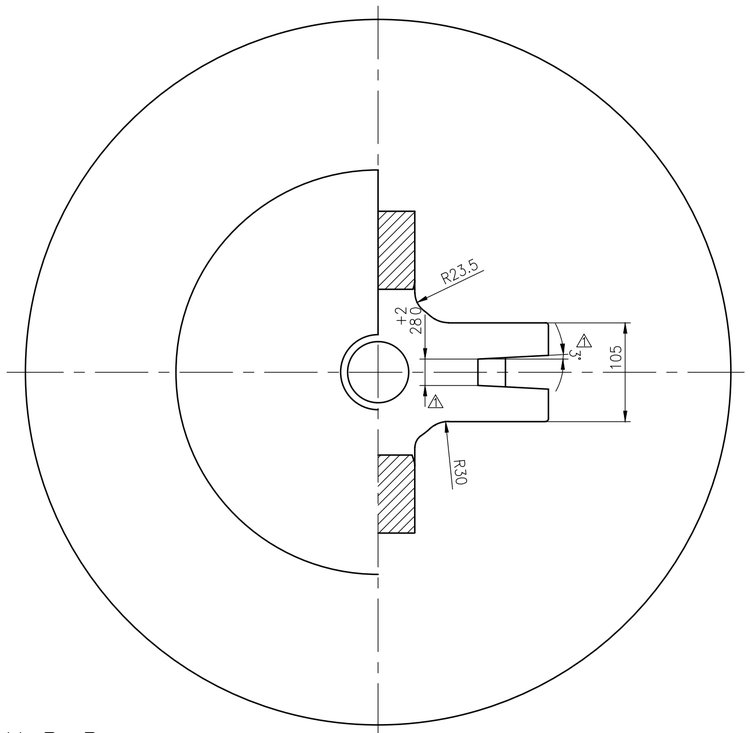

SECTION B–B

MATL.MARK *	SL No.	DESCRIPTION	MATL CODE	MATL SPECN	HEAT TREATMENT	SCRAP SORT	NET WT (kg)	GROSS WT (kg)	DRAWING No / COMPONENT CODE	ITEM No
C12A	04	CASTING	–	ASTM A217 C12A, CERTIFY	NORMALISED& TEMPERED	–	–	493	2.V.NJ35.14815R / 922033510000	007
WC9	03	CASTING	–	ASTM A217 WC9, CERTIFY	NORMALISED& TEMPERED	–	–	493	2.V.NH63.14815R/2 / 932031790000	007
WCB	02	CASTING	–	ASTM A216 WCC, CERTIFY	NORMALISED	–	–	493	2.V.NH62.14815R/1 / 932031850000	007
WCB	01	CASTING	–	ASTM A216 WCB, CERTIFY	NORMALISED	–	–	493	2.V.NH51.14815R/3 / 922030880000	007

REV	DATE	ALTERED	
06	20.11.14	A.MARIMUTHU	CHD & APPD MS & SSK
	SL. Nos. 04 INCLUDED		
05	25.08.14	DEEPAKRAJ	CHD & APPD MS & SSK
	IN SL. No COMPONENT CODE CHANGED DCP.801801		
04	01.10.13	DEEPAKRAJ	CHD & APPD DEEPAKRAJ&KRS
	WEIGHT 493 KG WERE 478 KG DCP.801616		
03	03.08.13	DEEPAKRAJ	CHD & APPD DEEPAKRAJ&KRS
	SL.No.02 & 03 INCLUDED MATL. MARK COLUMN INCLUDED		
02	06.07.13	DEEPAKRAJ	CHD & APPD K.RAJASEKAR
	DIMENSIONS 188 AND 102 ARE ADDED		
01	07.03.13	DEEPAKRAJ	CHD & APPD M.RAJAKUMAR
	SYMBOL INDICATE THE REVISION IN DIMENSION AND PROFILE DCN : 801470		

ZONE

CAUTION: The information on this document is the property of BHARAT HEAVY ELECTRICALS LTD. It must not be used directly or indirectly in any way detrimental to the interest of the company.

TYPE OF PRODUCT
OR NAME OF
CUSTOMER/PROJECT

BHARAT HEAVY ELECTRICALS LTD.,
UNIT: HIGH PRESSURE BOILER PLANT.
TIRUCHIRAPALLI -620014.
365–120

	NAME	SIGN	DATE	NO.OF VAR.
DRN	DEEPAKRAJ		02.03.13	
CHD	K.RAJASEKARAN		03.04.13	
APPD	M.RAJAKUMAR		02.03.13	

DEPT VL
CODE 320
SCALE NTS
WEIGHT (KG). –
REFERENCE INFORMATIONS –
NO. OF ITEMS

TITLE YOKE COVER CASTING
16"–C300–RV

CARD CODE U 01

DRAWING NO. 2–V–0000–14815R

REV 06

Size A2

DRAWING NO. 2-V-0000-14944R

ALL DIMENSIONS ARE IN MILLIMETRES. FOR TOLERANCES OF UNTOLERANCED DIMENSIONS DURING MANUFACTURE REFER RELEVANT QCP / QP

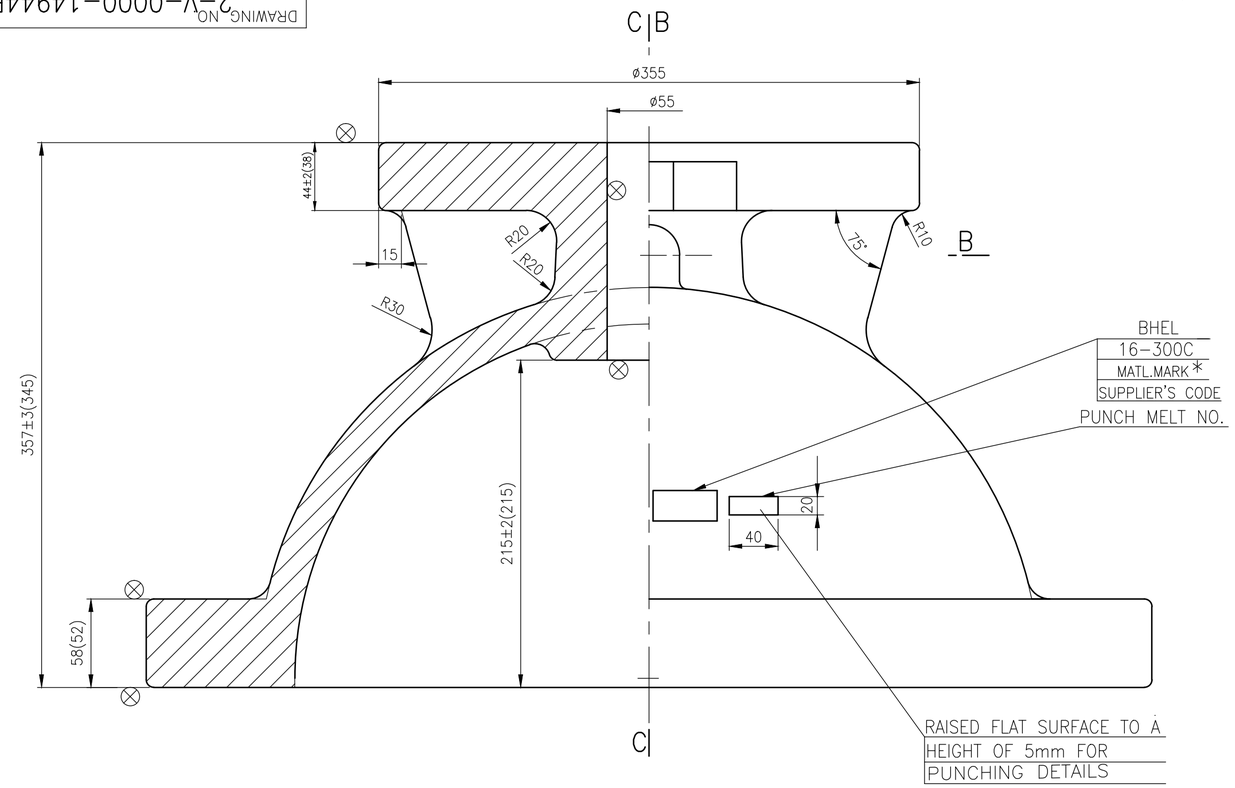

SECTION CC

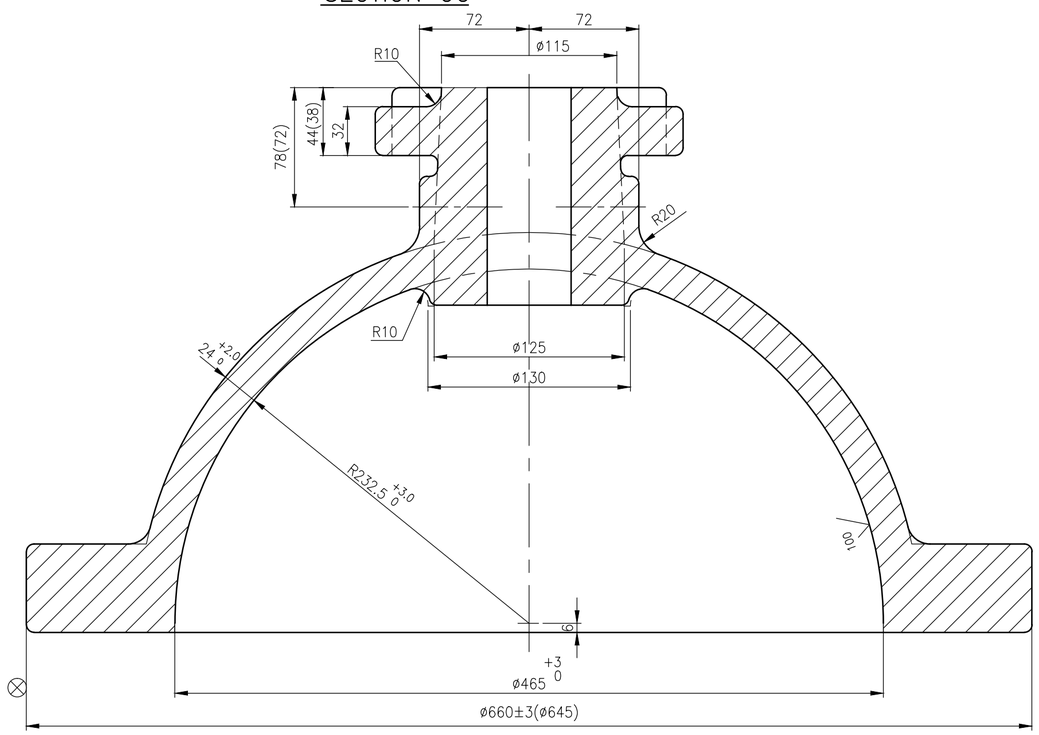

SECTION BB

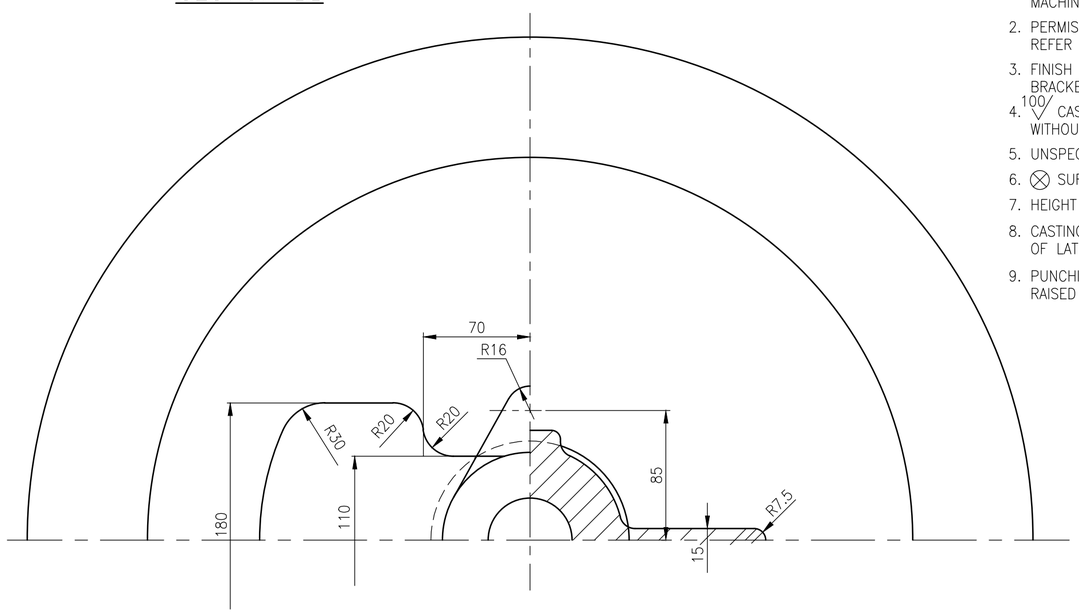

NOTES:

1. NECESSARY ALLOWANCES HAVE BEEN ADDED ON ALL MACHINABLE SURFACES.
2. PERMISSIBLE DIMENSIONAL DEVIATIONS OF CASTING SURFACES REFER LATEST APPLICABLE QUALITY PROCEDURE
3. FINISH MACHINED DIMENSIONS ARE INDICATED WITHIN BRACKETS FOR INFORMATION.
4. 100 CASTING SURFACES MUST BE OF HIGH QUALITY WITHOUT SURFACE UNEVENNESS.
5. UNSPECIFIED CASTING RADII 3-5mm.
6. ⊗ SURFACE TO BE MACHINED.
7. HEIGHT OF CASTING LETTERS 20mm.
8. CASTING SHALL COMPLY WITH THE REQUIREMENTS OF LATEST APPLICABLE QUALITY PROCEDURE
9. PUNCHING DETAILS SHALL BE MARKED ONLY ON RAISED FLAT SURFACE ONLY.

MATL.MARK *	SL. No.	DESCRIPTION	MATL CODE	MATL SPECN	HEAT TREATMENT	SCRAP SORT	NET WT (kg)	GROSS WT (kg)	DRAWING No / COMPONENT CODE	ITEM No
C12A	03	CASTING	–	A217 C12A CERTIFY	NT	–	204	–	2-V-NJ26-14944R 92 203 322 0000	011
WC9	02	CASTING	–	A217 WC9 CERTIFY	NT	–	204	–	2-V-N616-14944R 92 200 841 0000	011
WCB	01	CASTING	–	A216 WCB CERTIFY	NR	–	204	–	2-V-N436-14944R 92 200 527 0000	011

REV	DATE	ALTERED
ZONE		CHD & APPD

CAUTION: The information on this document is the property of BHARAT HEAVY ELECTRICALS LTD. It must not be used directly or indirectly in any way detrimental to the interest of the company.

TYPE OF PRODUCT
OR NAME OF
CUSTOMER/PROJECT

BHARAT HEAVY ELECTRICALS LTD.,
UNIT: HIGH PRESSURE BOILER PLANT.
TIRUCHIRAPALLI -620014.
365-120

	NAME	SIGN	DATE	NO.OF VAR.
DRN	A.MARIMUTHU		21.10.14	
CHD	M.SRINIVASAN		21.10.14	
APPD	S.SATHEESH		21.10.14	

DEPT VL
CODE 320
SCALE NTS
WEIGHT (KG). REF TABLE
REFERENCE INFORMATIONS
NO. OF ITEMS

TITLE: BONNET (CASTING) 16/300 GV
CARD CODE: U 01
DRAWING NO. 2-V-0000-14944R
REV 00

Size A2

ALL DIMENSIONS ARE IN MILLIMETRES. FOR TOLERANCES OF UNTOLERANCED DIMENSIONS DURING MANUFACTURE REFER RELEVANT QCP / QP.

DRAWING NO. 3-V-0000-25211R

SL.NO.	DRAWNG NO.	MATERIAL CODE	MATERIAL SPEC.	HEAT TREATMENT	øD1	øD2	øD3	øD4	øD5	øD6	øD7	øD8	L1	L2	L3	L4	L5	L6	L7	L8	L9	L10	Ra	Rb	Rc	WEIGHT (kg)	*RATING	*MATL MARK
01	3-V-NH51-25211R	922030870000	ASTM A216 WCB CERTIFY	NR	530	444	506	410	20	326	85	396	473	199	60	8	189	122	105	205	248	68	60	70	37	337	300	WCB
02	3-V-NH52-25211R	922030910000			514	414	488	399	20	150	95	383	519	223	60	8	213	131	104	192	241	56	100	42	42	370	600	WCB
03	3-V-NH63-25211R	922031780000	ASTM A217 WC9 CERTIFY	NT	530	444	506	410	20	326	85	396	473	199	60	8	189	122	105	205	248	68	60	70	37	337	300	WC9
04	3-V-NJ35-25211R	922033520000	ASTM A217 C12A CERTIFY	NT	530	444	506	410	20	326	85	396	473	199	60	8	189	122	105	205	248	68	60	70	37	337	300	C12A

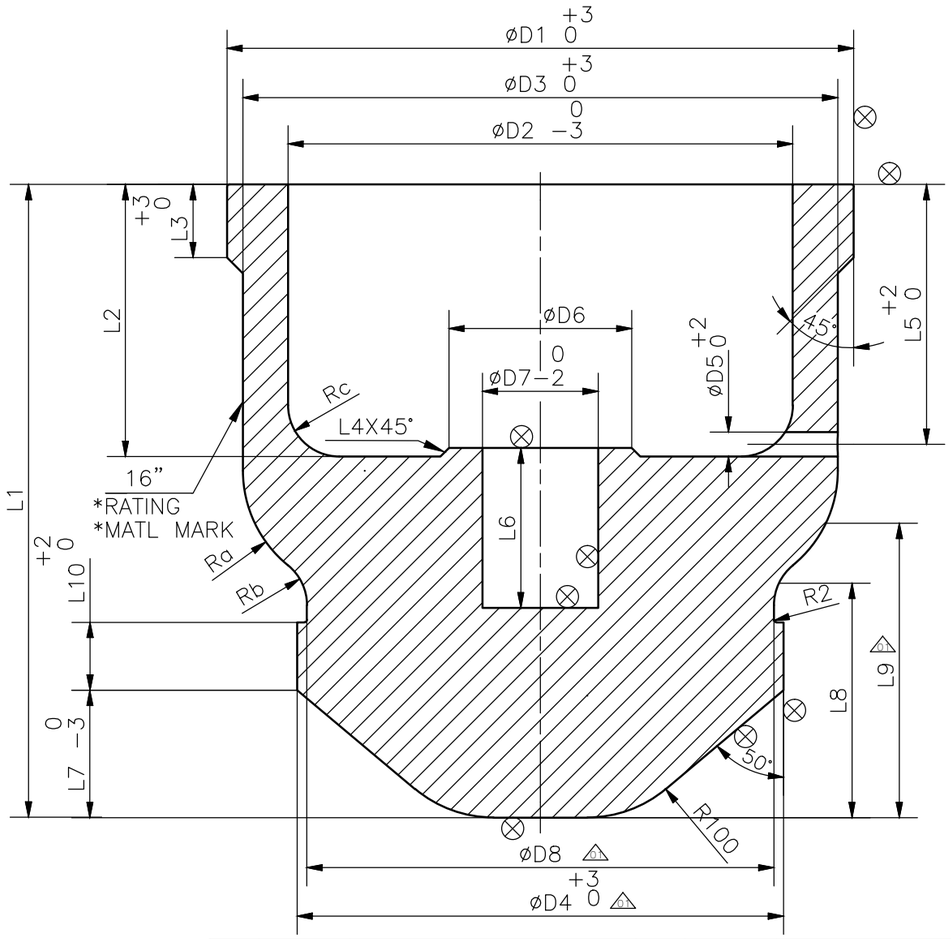

NOTE :
01. UNSPECIFIED RADII TO BE R3-5 MM
02. ⊗ INDICATES THE SURFACES WHICH ARE TO BE MACHINED FURTHER.

NO OFF	DESCRIPTION	MATL CODE	MATL SPECN	HEAT TREATMENT	SCRAP SORT	NET WT (kg)	GROSS WT (kg)	DRAWING No	ITEM No
–	–	–	–	–	–	–	–	–	–

REV	DATE	ALTERED	REV	DATE	ALTERED
04	07.09.2016	K.NAVIN CHD & APPD SSK & KRS	03	20.11.14	A.MARIMUTHU CHD & APPD MS & SSK
	DRAWING UPDATED			SL.NO. 04 INCLUDED	
02	03.08.13	DEEPAKRAJ CHD & APPD DEEPAKRAJ & KRS	01	04.03.13	ARUN CHD & APPD MRK
SL.NO. 3 INCLUDED RATING AND MATL. MARK COLUMN INCLUDED			SYMBOL 01 INDICATES REVISON IN DIMENSION & PROFILE. DCN: 801469		

CAUTION: The information on this document is the property of BHARAT HEAVY ELECTRICALS LTD. It must not be used directly or indirectly in any way detrimental to the interest of the company.

TYPE OF PRODUCT OR NAME OF CUSTOMER/PROJECT —

BHARAT HEAVY ELECTRICALS LTD.,
UNIT: HIGH PRESSURE BOILER PLANT.
TIRUCHIRAPALLI-620014.
365-121

	NAME	SIGN	DATE	NO.OF VAR.
DRN	ARUN		23.11.12	
CHD	MRK		23.11.12	
APPD	MRK		23.11.12	

DEPT	SCALE	WEIGHT (KG).	REFERENCE INFORMATIONS	NO. OF ITEMS
VL	NTS	REF. TABLE	–	
CODE 320				

TITLE	CARD CODE	DRAWING NO.	REV
DISC CASTING 16"	U 01	3-V-0000-25211R	04

Size A3

DRAWING NO. 1-V-0000-05185R

ALL DIMENSIONS ARE IN MILLIMETRES. FOR TOLERANCES OF UNTOLERANCED DIMENSIONS DURING MANUFACTURE REFER RELEVANT QCP/QP

SECTION BB

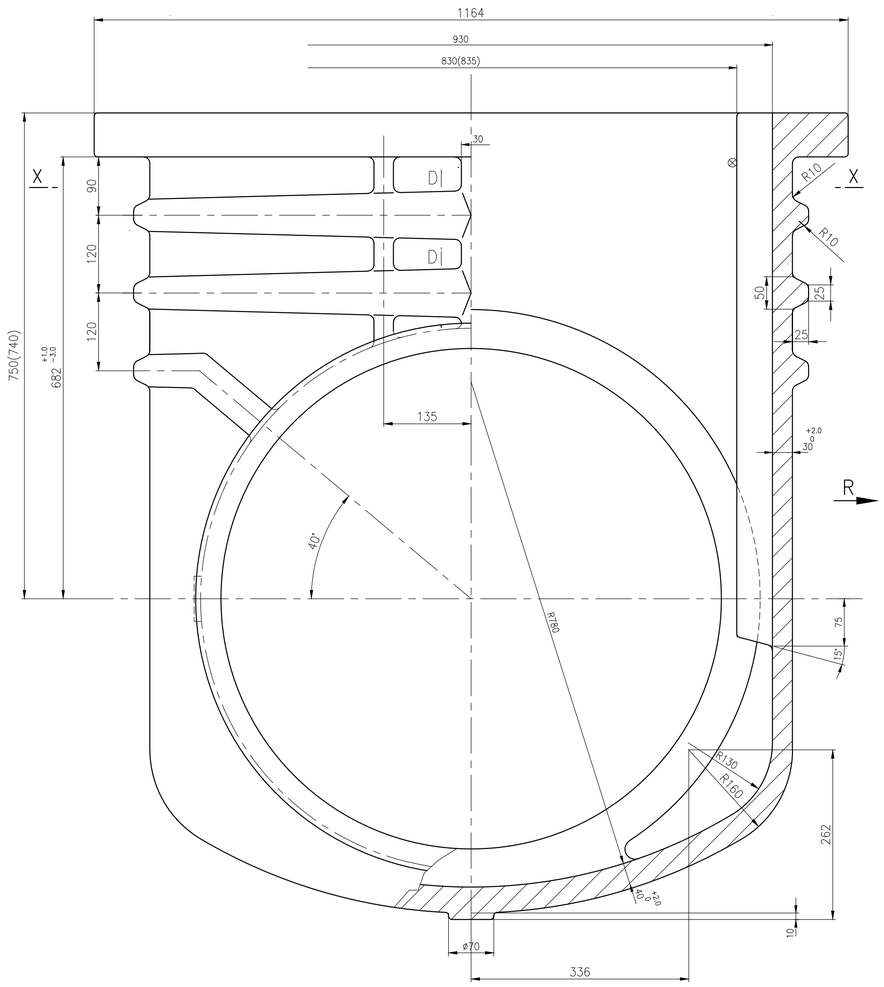

SECTION DD

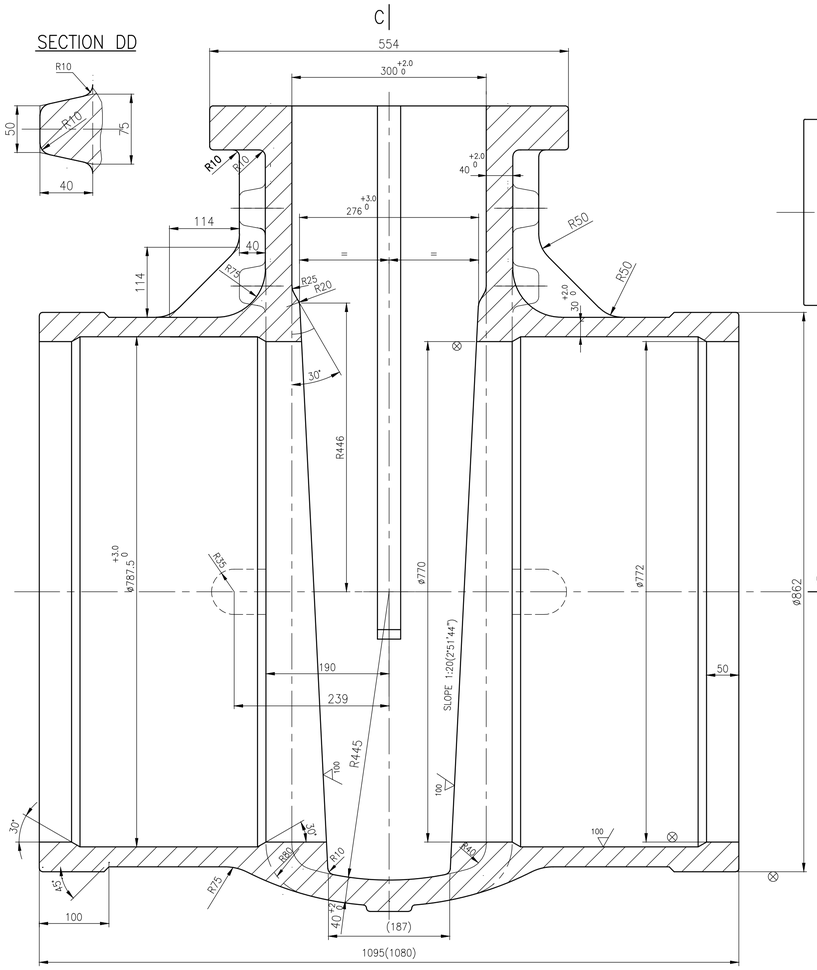

MARKING DETAILS ON CASTING

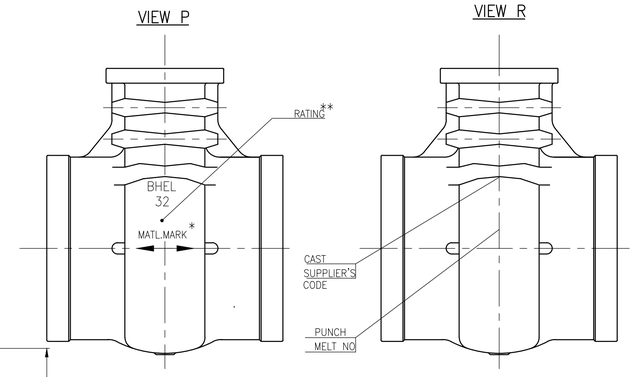

SECTION CC

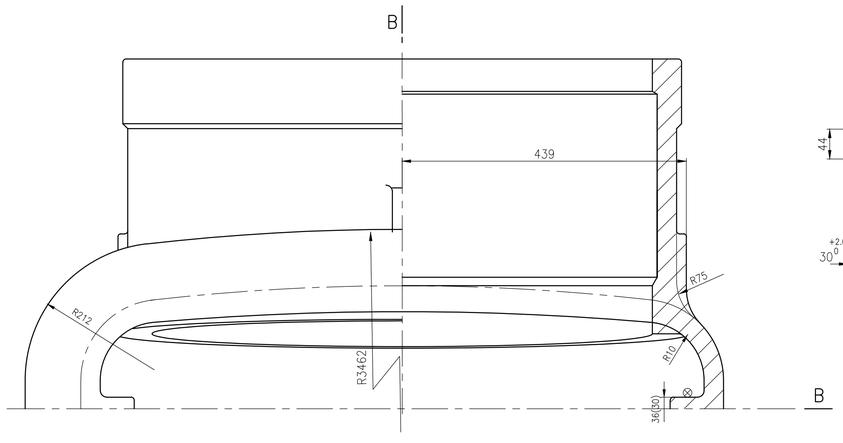

SECTION XX

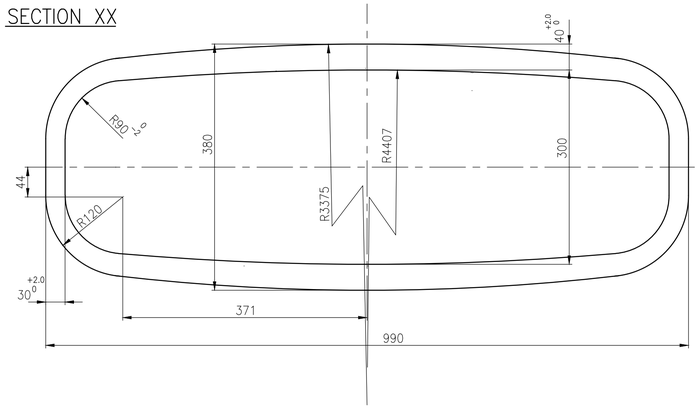

NOTES

1. NECESSARY MACHINING ALLOWANCES HAVE BEEN ADDED ON ALL MACHINABLE SURFACES.
2. ⊗ THIS MARK INDICATES THE SURFACES TO BE MACHINED.
3. UNSPECIFIED CASTING RADII–R5 MAX.
4. FOR PERMISSIBLE DIMENSIONAL DEVIATIONS OF NON TOLERANCED CASTING DIMENSIONS REFER LATEST APPLICABLE QUALITY PROCEDURE.
5. CASTING SHALL GENERALLY COMPLY WITH THE REQUIREMENTS OF LATEST APPLICABLE QUALITY PROCEDURE IN ALL RESPECTS.
6. 100/ ▽ INDICATES THE CASTING SURFACES WHICH MUST BE OF HIGH QUALITY WITHOUT SURFACE UNEVENNESS.
7. FINISH MACHINED DIMENSIONS ARE INDICATED WITHIN BRACKETS FOR INFORMATION ONLY,.
8. PUNCHING DETAILS SHALL BE MARKED ONLY ON RAISED FLAT SURFACE GIVEN AT ZONE B12.
9. HEIGHT OF CASTING LETTERS 50mm.

@ 10. QUALITY PROCEDURE AS APPLICABLE FOR SPECIAL CLASS VALVE

@	150SPL	WC9	02	–	–	SA217 WC9 ATTEST	NT	–	1505	–	1.V.NH84.05185R/1 922032140000	001
	150	WCB	01	–	–	SA216 WCB ATTEST	NR	–	1505	–	1–V–N929–05185R 922012190000	001
	RATING**	MATL.MARK*	SL.No.	DESCRIPTION	MATL CODE	MATL SPECN	HEAT TREATMENT	SCRAP SORT	NET WT (kg)	GROSS WT (kg)	DRAWING No / COMPONENT CODE	ITEM No

REV	DATE	ALTERED	A.MARIMUTHU	REV	DATE	ALTERED	M.S
02	20.08.14	CHD & APPD	MS & SSK	01	28.01.14	CHD & APPD	SSK & KRS
		NOTE–10 INCLUDED				SL.No. 02 INCLUDED	

CAUTION: The information on this document is the property of BHARAT HEAVY ELECTRICALS LTD. It must not be used directly or indirectly in any way detrimental to the interest of the company.

TYPE OF PRODUCT
OR NAME OF
CUSTOMER/PROJECT

365–119

BHARAT HEAVY ELECTRICALS LTD.,
UNIT: HIGH PRESSURE BOILER PLANT.
TIRUCHIRAPALLI–620014.

	NAME	SIGN	DATE
DRN	V.BAIRAVAN		14.10.2000
CHD	R.L.NARAYANAN		14.10.2000
APPD	M.RAJAKUMAR		14.10.2000

DEPT VL | CODE 320 | SCALE N T S | WEIGHT (KG). REF.TABLE | REFERENCE INFORMATIONS CAD REF. NO:C105185R

TITLE: BODY 32"/150 CL | CARD CODE U 01 | DRAWING NO. 1–V–0000–05185R | REV 02

Size A1

TP-DG-1-V-N049-02868R
CORPORATE DRG ID

SECTION-AA

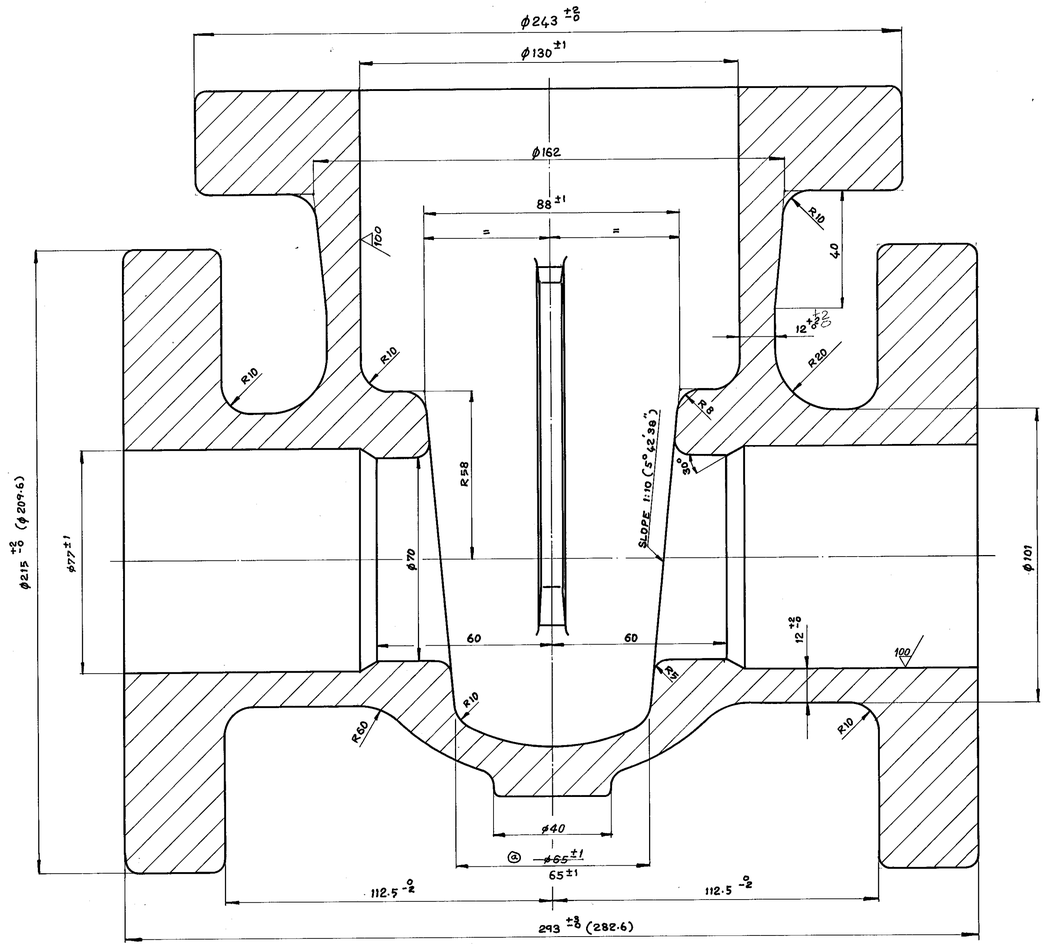

SECTION-BB

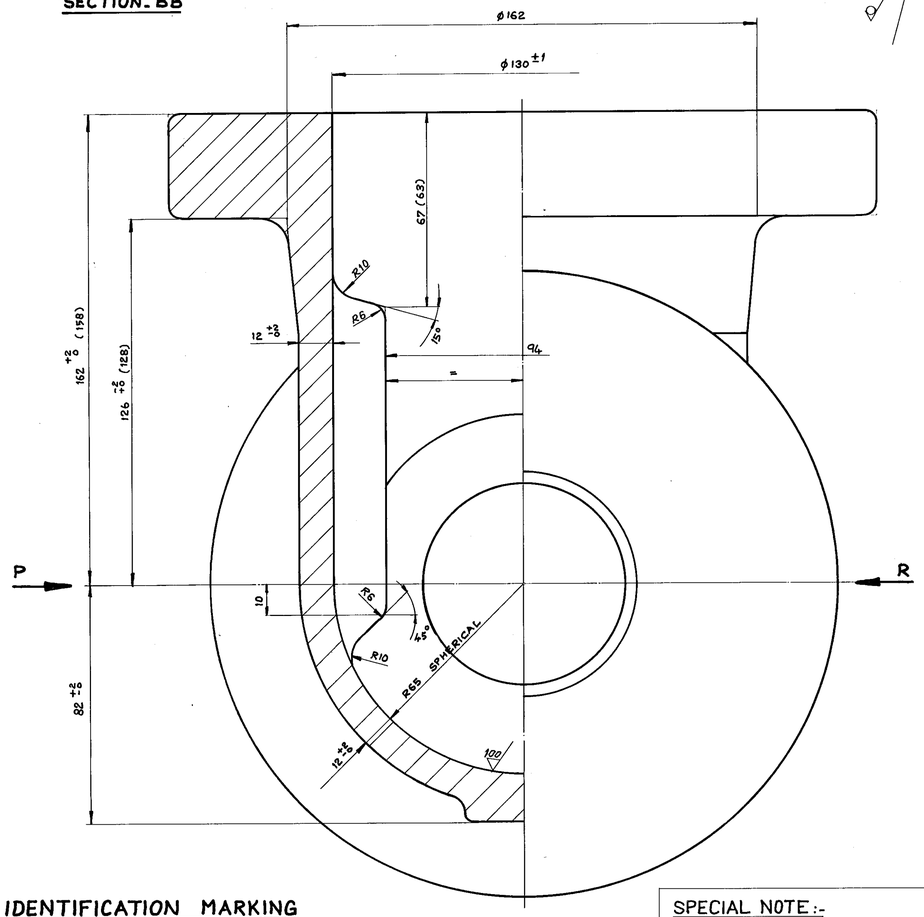

CAST IDENTIFICATION MARKING

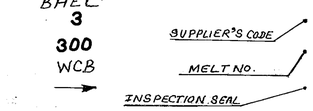

SPECIAL NOTE:-

01. GUIDE BAR DIMENSIONS TO BE MAINTAINED WITHIN THE TOLERENCES INDICATED.

02. BOTH GUIDE RIBS TO BE COPLANAR AND TRUELY VERTICAL.

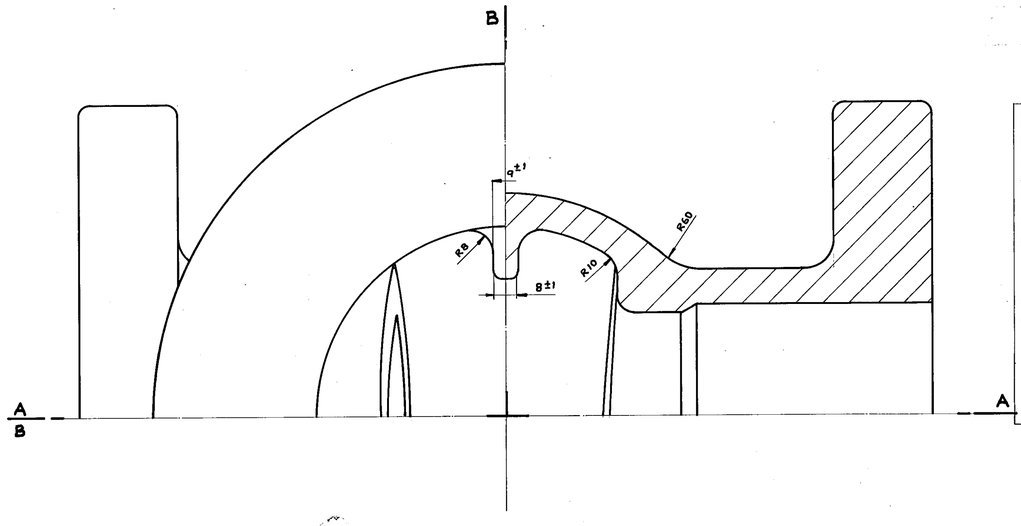

NOTE:-

01. NECESSARY MACHINING ALLOWANCES HAVE BEEN ADDED IN THIS DRG. ON MACHINABLE SURFACES.

02. PERMISSIBLE DIMENSIONAL DEVIATIONS OF CASTING SURFACES - REFER TO CHART.

03. UNSPECIFIED CASTING RADII R3-R5.

04. 100 ▽ CASTING SURFACES MUST BE OF HIGH QUALITY WITHOUT SURFACE UNEVENNESS.

05. HEIGHT OF CASTING LETTERS 12MM.

06. ⊗ SURFACES TO BE MACHINED.

07. FINISH MACHINED DIMENSIONS ARE INDICATED WITHIN BRACKETS.

08. CASTING SHALL MEET ALL THE REQUIREMENTS OF TDC:4/101 (WITH LATEST REVISION).

09. RISER REMAINS ARE TO BE COMPLETELY REMOVED SUITABLY.

SL.ND	CASTING DRG. ND	MATL. CODE	MATL. SPECN	MATL. MARK TO BE CAST.	APPLICABLE TYPE NOS.
01.	1-V-N049-02868R/02	92 027 038	A216WCB - NR ATTEST	—	N049,

BHARAT HEAVY ELECTRICALS LTD.,
BOILER PLANT UNIT, TIRUCHIRAPALLI-14

FIRST ANGLE	SCALE	DRAWN	J. PRABAKAR	TOTAL NET WT (KG) 40.0
		CHECKED	?	TYPE
		APPROVED	J.S. KUMAR	
ALL DIMENSIONS IN MILLIMETRES		DATE	08 JUNE 89	NEW/OLD DRG. NO.

CAUTION
THE INFORMATION CONTAINED IN THIS DRAWING IS THE PROPERTY OF BHARAT HEAVY ELECTRICALS LTD., BOILER PLANT UNIT, TIRUCHY-14 AND SHALL NOT BE USED WITHOUT THEIR EXPRESS WRITTEN PERMISSION IN ANY FORM OR PART THEREOF FOR ANY OTHER PURPOSE THAN FOR WHICH IT IS SENT TO YOU.

33-113

TITLE: BODY (3"-300 CLASS)

DRAWING NO. 1-V-N049-02868R

REVISION 02

REV.	DATE	ALTD. BY	CHD & APPD.
02	8.5.96		

HYD. TEST PR. NOTE DELETED. REFER DCN C80579

REV.	DATE	ALTERED	CHECKED
1	16 0190	J.P	J.K

ZONE ⊗

DIMENSION ϕ65 ±1 CHANGED AS 65 ±1

TP-DG-1-V-N049-02868R
CORPORATE DRG ID

DRAWING NO. 2-V-0000-05934R

ALL DIMENSIONS ARE IN MILLIMETRES. FOR TOLERANCES OF UNTOLERANCED DIMENSIONS DURING MANUFACTURE REFER RELEVANT QCP / QP

SECTION-AA

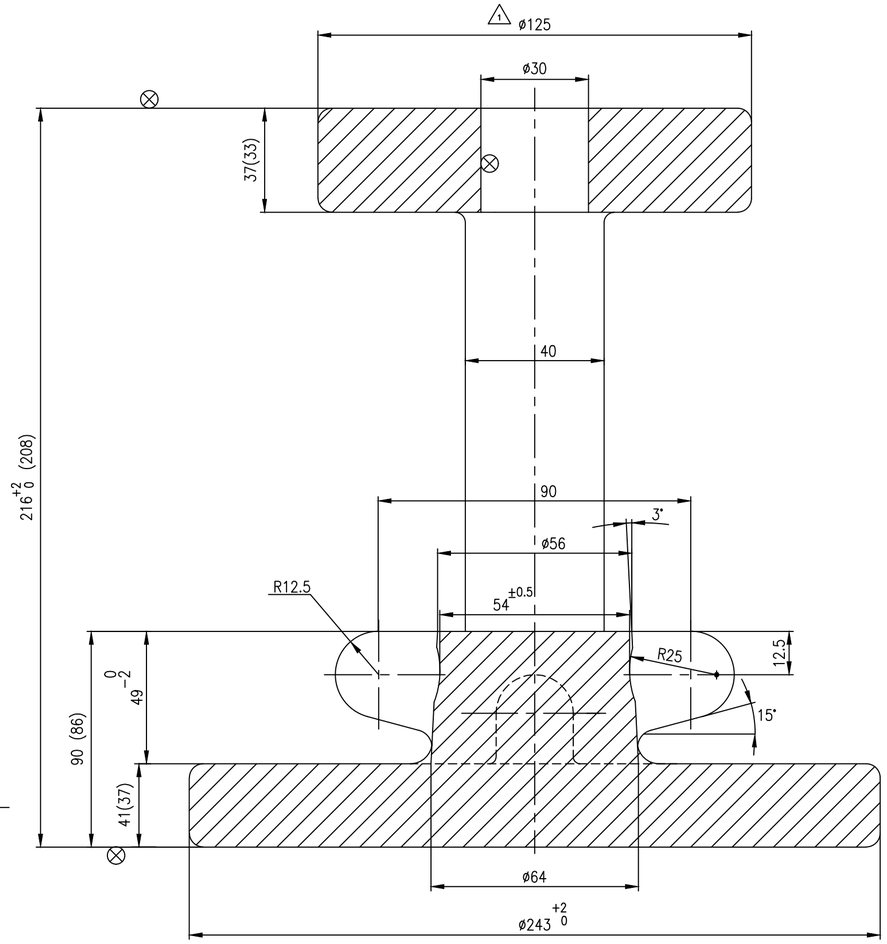

SECTION-BB

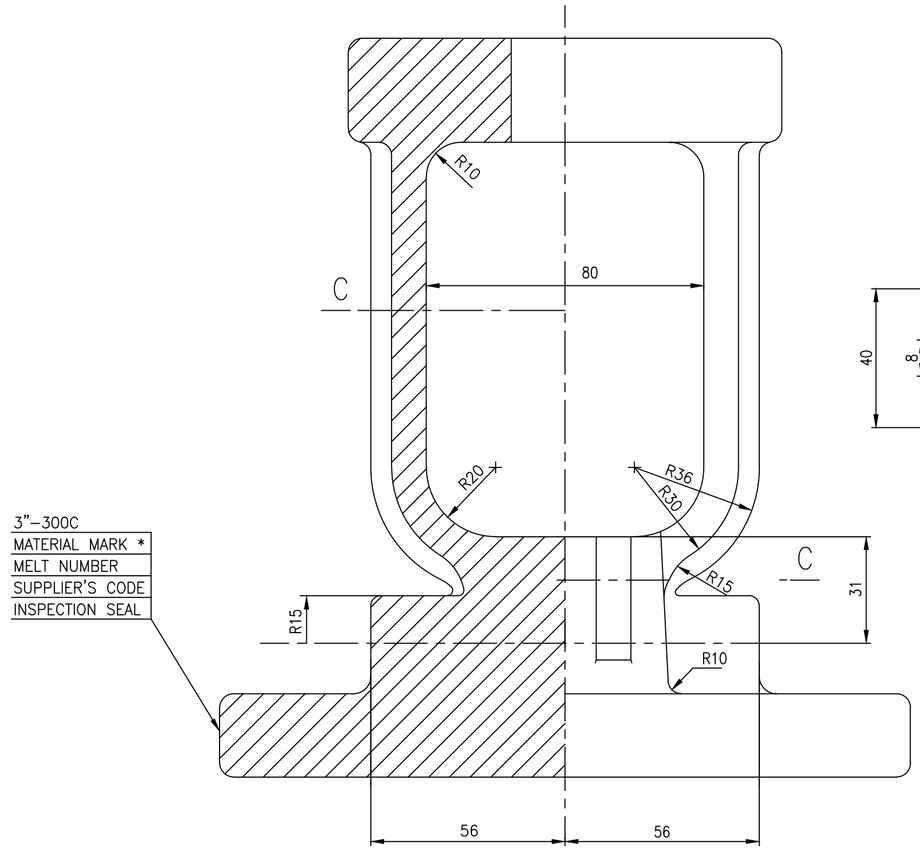

SECTION-CC

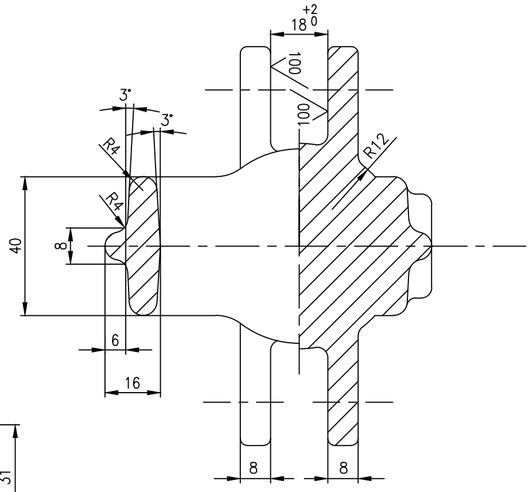

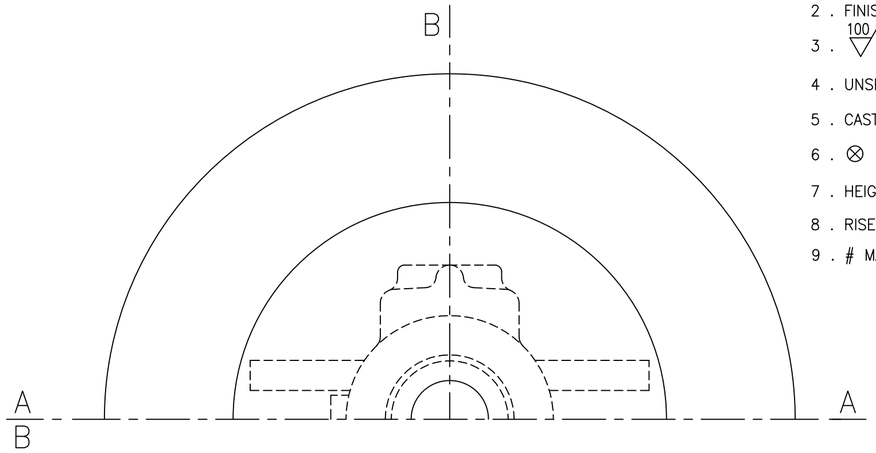

NOTES:

1. NECESSARY MACHINING ALLOWANCES HAVE BEEN ADDED ON ALL MACHINABLE SURFACES
2. FINISHED MACHINED DIMENSIONS ARE INDICATED WITHIN BRACKETS FOR INFORMATION
3. 100 CASTING SURFACES MUST BE HIGH QUALITY WITHOUT SURFACE UNEVENNESS
4. UNSPECIFIED CASTING RADII 3 – 5 MM
5. CASTING SHALL COMPLY WITH THE REQUIREMENTS OF APPLICABLE TDC WITH LATEST REVISOIN.
6. ⊗ SURFACES TO BE MACHINED
7. HEIGHT OF CAST LETTERS 12 MM
8. RISER REMAINS ARE TO BE COMPLETELY REMOVED SUITABLY.
9. # MARKED ITEMS IGC TEST SHALL BE CONDUCTED.

SL No	MATL. MARK * TO BE CAST	MATL CODE	MATL SPECN	HEAT TREATMENT	SCRAP SORT	NET WT (kg)	GROSS WT (kg)	DRAWING No	ITEM No
08	A351 CF3M	92 203 863	A351 CF3M CERTIFY	SH	--	--	--	2.V.NK62.05934R/00	--
# 07	A351 CF8	92 203 555	A351 CF8 CERTIFY	SH	--	--	--	2.V.U637.05934R/00	--
06	A351 CF8	92 200 561	A351 CF8 CERTIFY	SH	--	--	--	2.V.N364.05934R/02	--
05	A351 CF8M	92 200 560	A351 CF8M CERTIFY	SH	--	--	--	2.V.N373.05934R/02	--
04	A217 WC9	92 200 559	A217 WC9 CERTIFY	N & T	--	--	--	2.V.N381.05934R/02	--
03	A217 WC6	92 200 558	A217 WC6 CERTIFY	N & T	--	--	--	2.V.N380.05934R/02	--
02	A216 WCC	92 200 557	A216 WCC CERTIFY	NORMALISED	--	--	--	2.V.N379.05934R/02	--
01	A216 WCB	92 200 357	A216 WCB CERTIFY	NORMALISED	--	--	--	2.V.N326.05934R/02	--

REV	DATE	ALTERED	
06	31.05.19	R.P.SINGH	CHD & APPD SSK & KRS
	SL. No. 08 INCLUDED		
05	08.05.18	R.P.SINGH	CHD & APPD SSK & KRS
	SL. No. 07 INCLUDED		
04	09.06.12	T.R.RAMAMURTHY	CHD & APPD SSK & KRS
	IN SECTION-CC DIMN.16 +2 0 DELETED REFER DCP.801337		
03	22.12.97	T.R.RAMAMURTHY	CHD & APPD K.S.RAMAN
ZONE	IN STUFFING BOX ZONE R25 & 54±0.5 INCLUDED. IN SECTION-CC DIMN. 6 WAS 10 REFER DCN. CS:0814		

CAUTION: The information on this document is the property of BHARAT HEAVY ELECTRICALS LTD. It must not be used directly or indirectly in any way detrimental to the interest of the company.

TYPE OF PRODUCT OR NAME OF CUSTOMER/PROJECT: CS

DRAWING REDRAWN WITH REV. 04 ON 09.06.2012

BHARAT HEAVY ELECTRICALS LTD.,
UNIT: HIGH PRESSURE BOILER PLANT.
TIRUCHIRAPALLI -620014.
365-120

	NAME	SIGN	DATE	NO.OF VAR.
DRN	K.P.LEON		26.03.96	
CHD	N.DHANAPAL		26.03.96	
APPD	A.VISWANATHAN		26.03.96	

DEPT VL
CODE 320
SCALE NTS
WEIGHT (KG). 20.2
REFERENCE INFORMATIONS: CAD REF: C205934R
NO. OF ITEMS

TITLE: YOKE COVER (3"-300C GV HW)
CARD CODE: U 01
DRAWING NO. 2-V-0000-05934R
REV 06

Size A2

DRAWING NO. 2-V-0000-06107R

ALL DIMENSIONS ARE IN MILLIMETRES. FOR TOLERANCES OF UNTOLERANCED DIMENSIONS DURING MANUFACTURE REFER RELEVANT QCP / QP

SECTION-AA

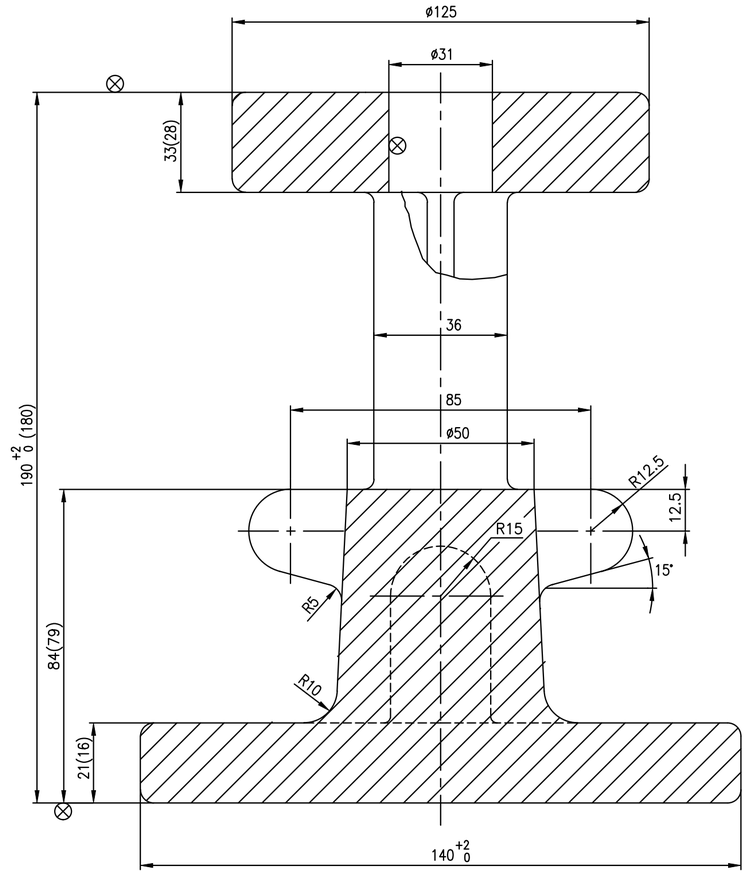

SECTION-BB

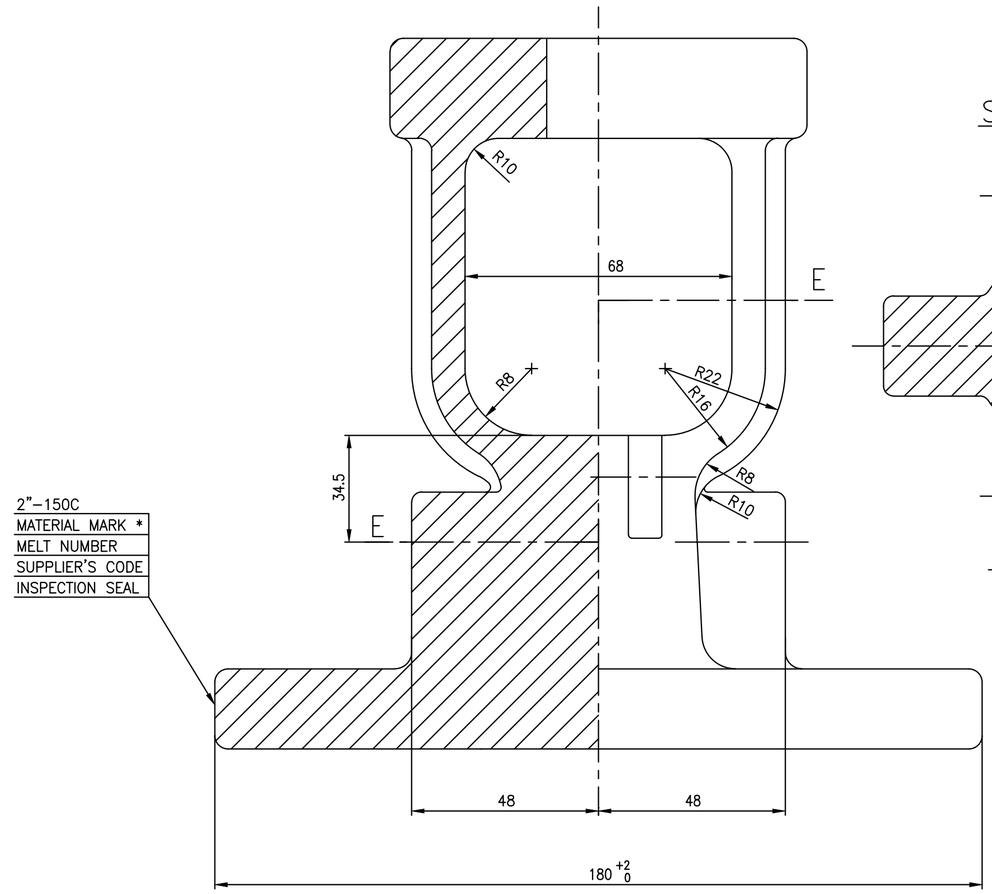

SECTION-EE

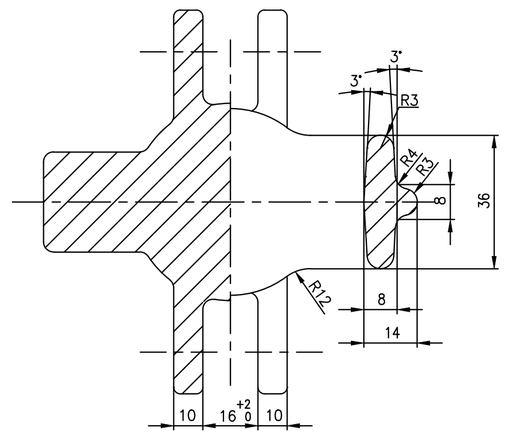

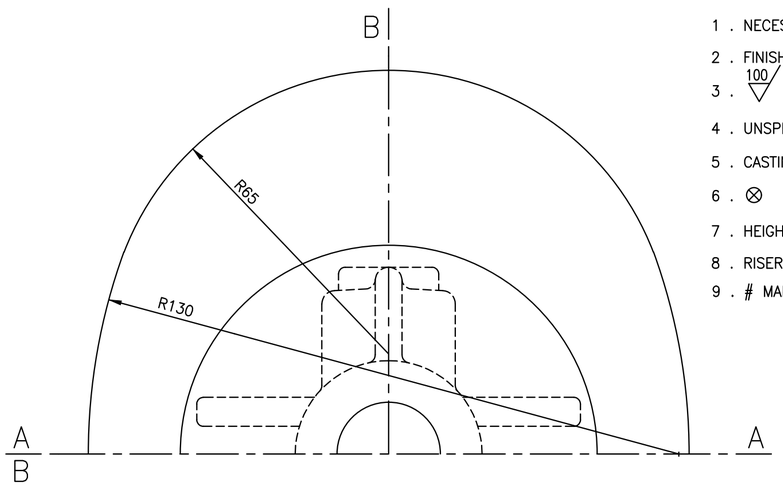

NOTES:

1. NECESSARY MACHINING ALLOWANCES HAVE BEEN ADDED ON ALL MACHINABLE SURFACES
2. FINISHED MACHINED DIMENSIONS ARE INDICATED WITHIN BRACKETS FOR INFORMATION
3. 100 CASTING SURFACES MUST BE HIGH QUALITY WITHOUT SURFACE UNEVENNESS
4. UNSPECIFIED CASTING RADII 3 – 5 MM
5. CASTING SHALL COMPLY WITH THE REQUIREMENTS OF LATEST QUALITY PROCEDURE.
6. ⊗ SURFACES TO BE MACHINED
7. HEIGHT OF CAST LETTERS 12 MM
8. RISER REMAINS ARE TO BE COMPLETELY REMOVED SUITABLY.
9. # MARKED ITEMS IGC TEST SHALL BE CONDUCTED.

SL. No.	DESCRIPTION*	MATL CODE	MATL SPECN	HEAT TREATMENT	SCRAP SORT	NET WT (kg)	GROSS WT (kg)	DRAWING No / COMPONENT CODE	ITEM No
# 07	CF8	92 203 553	A351 CF8 CERTIFY	SH	46	--	--	2.V.U634.06107R	05
06	CF8M	92 200 581	A351 CF8M CERTIFY	SH	46	--	--	2.V.N472.06107R/01	05
05	CF8	92 200 580	A351 CF8 CERTIFY	SH	46	--	--	2.V.N277.06107R/01	05
04	WC9	92 200 509	A217 WC9 CERTIFY	N & T	20	--	--	2.V.N301.06107R/01	05
03	WC6	92 200 508	A217 WC6 CERTIFY	N & T	20	--	--	2.V.N300.06107R/01	05
02	WCC	92 200 507	A216 WCC CERTIFY	NORMALISED	10	--	--	2.V.N299.06107R/01	05
01	WCB	92 200 506	A216 WCB CERTIFY	NORMALISED	10	--	--	2.V.N298.06107R/01	05

REV	DATE	ALTERED	
03	07.05.18	R.P.SINGH	CHD & APPD SSK & KRS

SL.No. 07 INCLUDED.

REV	DATE	ALTERED	
02	28.04.97	N.DHANAPAL	CHD & APPD A.VISWANATHAN

DIMENSION 84(79) CORRECTLY INDICATAD

REFER DCN.CS:0694

REV	DATE	ALTERED	
01	01.04.96	T.R.RAMAMURTHY.	CHD & APPD A.VISWANATHAN

ZONE

SL.No. 05 & 06 INCLUDED.

CAUTION: The information on this document is the property of BHARAT HEAVY ELECTRICALS LTD. It must not be used directly or indirectly in any way detrimental to the interest of the company.

TYPE OF PRODUCT
OR NAME OF
CUSTOMER/PROJECT

BHARAT HEAVY ELECTRICALS LTD.,
UNIT: HIGH PRESSURE BOILER PLANT.
TIRUCHIRAPALLI -620014.
365-120

	NAME	SIGN	DATE	NO.OF VAR.
DRN	K.P.LEON		06.01.96	
CHD	N.DHANAPAL		06.01.96	
APPD	A.VISWANATHAN		08.01.96	

DEPT VL
CODE 320
SCALE NTS
WEIGHT (KG). 8.63
REFERENCE INFORMATIONS
CAD REF: C206107R
NO. OF ITEMS

TITLE
YOKE COVER
(2"-150C GV SG)

CARD CODE U 01

DRAWING NO. 2-V-0000-06107R

REV 03

Size A2

DRAWING NO. 2-V-0000-08052R

ALL DIMENSIONS ARE IN MILLIMETRES. FOR TOLERANCES OF UNTOLERANCED DIMENSIONS DURING MANUFACTURE REFER RELEVANT QCP / QP

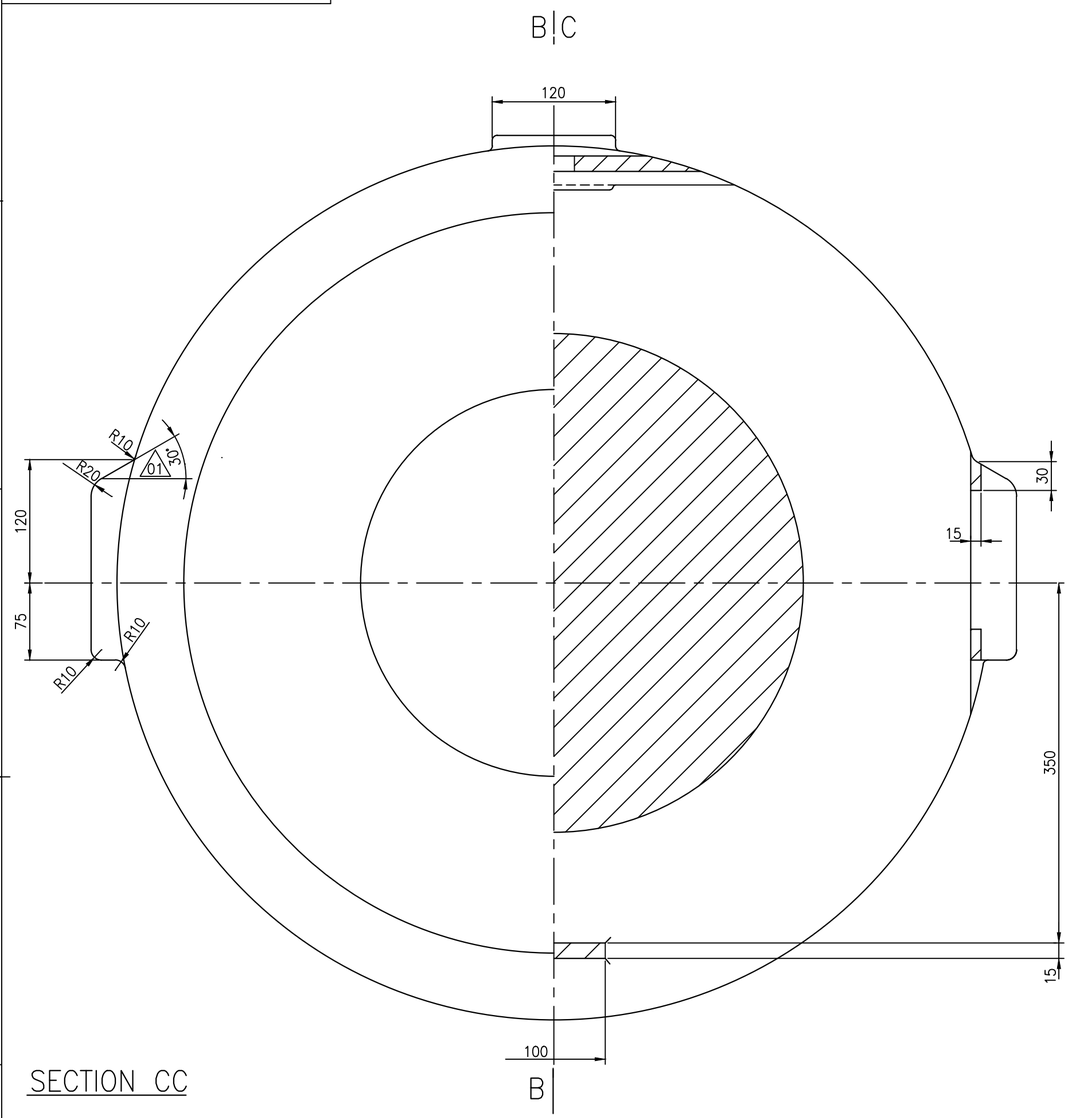

SECTION CC

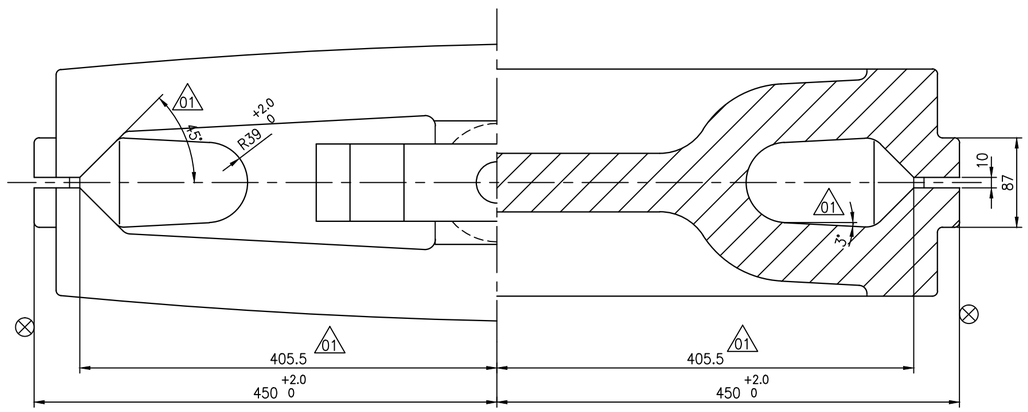

SECTION BB

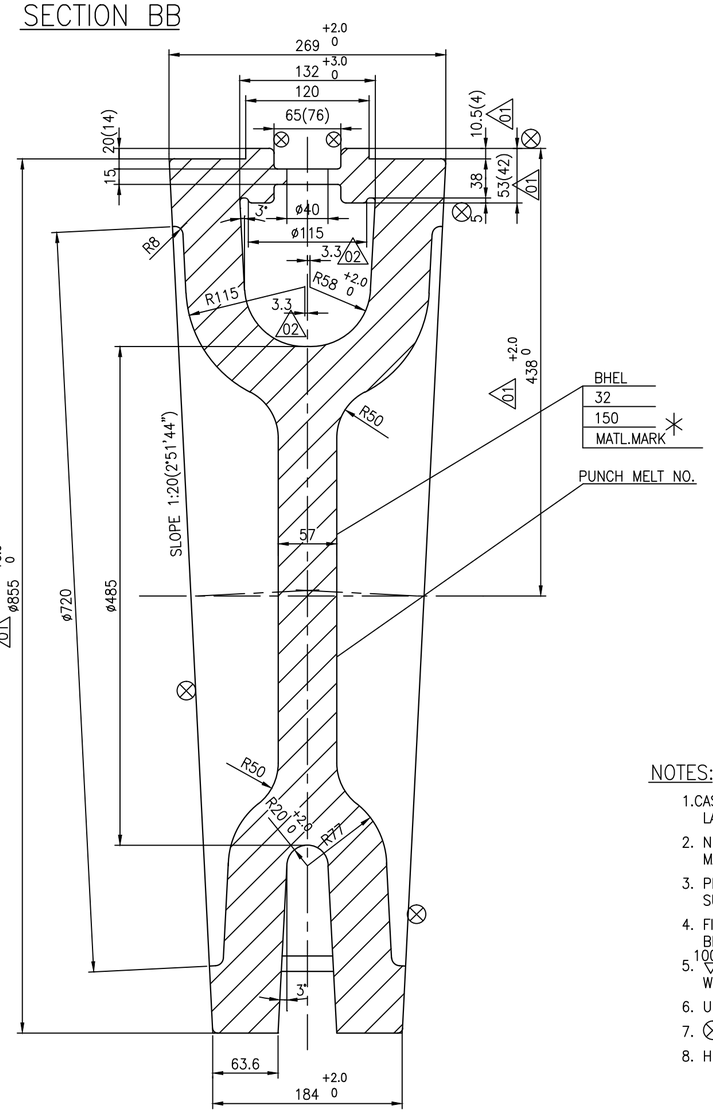

NOTES:

1. CASTING SHALL COMPLY WITH THE REQUIREMENT OF LATEST APPLICABLE QUALITY PROCEDURE IN ALL RESPECTS.
2. NECESSARY ALLOWANCES HAVE BEEN ADDED ON ALL MACHINABLE SURFACES.
3. PERMISSIBLE DIMENSIONAL DEVIATIONS OF CASTING SURFACES REFER LATEST APPLICABLE QUALITY PROCEDURE
4. FINISH MACHINED DIMENSIONS ARE INDICATED WITHIN BRACKETS FOR REFERENCE ONLY.
5. 100/ CASTING SURFACES MUST BE OF HIGH QUALITY WITHOUT SURFACE UNEVENNESS.
6. UNSPECIFIED CASTING RADII 3–5mm.
7. ⊗ SURFACE TO BE MACHINED.
8. HEIGHT OF CASTING LETTERS 20mm.

REV	DATE	ALTERED	
03	28.01.14	CHD & APPD	M.S SSK & KRS
ZONE	SL.No. 02 INCLUDED		
REV	DATE	ALTERED	
02	22.06.00	CHD & APPD	R.L M.R.K
ZONE	DIM 3.3 INCLUDED DCN NO. HM 0452		
REV	DATE	ALTERED	
01	20.10.99	CHD & APPD	R.L M.R.K
ZONE	DIMS ø855 +3 0, 438 +2 0, 10.5(4) & 53.5 WERE ø850, 435, 10 & 53 RESP. DIMS 405.5, 45°, 3° & 30° INCLUDED DCN NO, HM 0409		

MATL.MARK	SL No.	DESCRIPTION	MATL CODE	MATL SPECN	HEAT TREATMENT	SCRAP SORT	NET WT (kg)	GROSS WT (kg)	DRAWING No / COMPONENT CODE	ITEM No
WC9	02	–	–	A217 WC9 ATTEST	NT	–	–	480	2-V-NH84-08052R / 922032150000	–
WCB	01	–	–	A216 WCB CERTIFY	NR	–	–	480	2-V-N827-08052R/2 / 922010770000	–

CAUTION: The information on this document is the property of BHARAT HEAVY ELECTRICALS LTD. It must not be used directly or indirectly in any way detrimental to the interest of the company.

TYPE OF PRODUCT
OR NAME OF
CUSTOMER/PROJECT

BHARAT HEAVY ELECTRICALS LTD.,
UNIT: HIGH PRESSURE BOILER PLANT.
TIRUCHIRAPALLI -620014.
365-120

	NAME	SIGN	DATE	NO.OF VAR.
DRN	V.BAIRAVAN		24.06.99	
CHD	R.L.NARAYANAN		24.06.99	
APPD	M.RAJAKUMAR		24.06.99	

DEPT	CODE	SCALE	WEIGHT (KG).	REFERENCE INFORMATIONS	NO. OF ITEMS
VL	320	N T S	–		

TITLE	CARD CODE	DRAWING NO.	REV
WEDGE 32"/150C GV	U 01	2-V-0000-08052R	03

Size A2

DRAWING NO. 2-V-0000-08295R

ALL DIMENSIONS ARE IN MILLIMETRES. FOR TOLERANCES OF UNTOLERANCED DIMENSIONS DURING MANUFACTURE REFER RELEVANT QCP / QP

SECTION AA

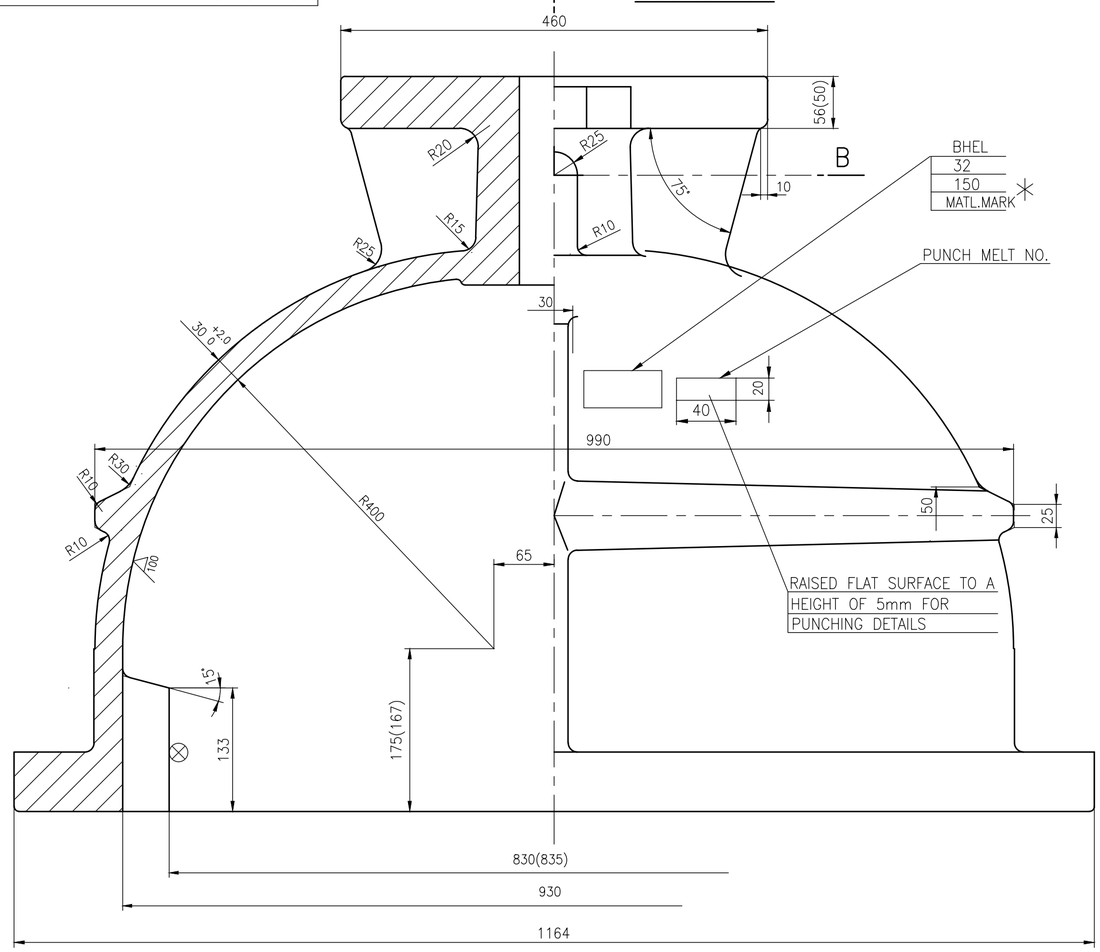

SECTION CC

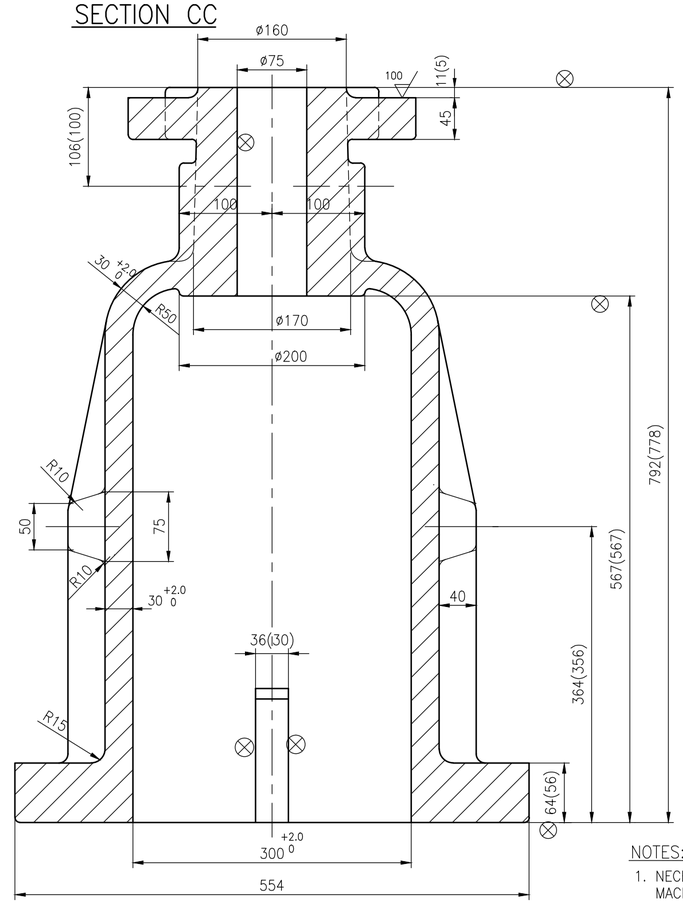

NOTES:

1. NECESSARY ALLOWANCES HAVE BEEN ADDED ON ALL MACHINABLE SURFACES.
2. FOR PERMISSIBLE DIMENSIONAL DEVIATIONS OF NON TOLERANCED LATEST DIMENSIONS REFER LATEST APPLICABLE QUALITY WORK INSTRUCTIONS
3. FINISH MACHINED DIMENSIONS ARE INDICATED WITHIN BRACKETS FOR INFORMATION ONLY.
4. 100/▽ INDICATES THE CASTINGSURFACES MUST BE OF HIGH QUALITY WITHOUT SURFACE UNEVENNESS.
5. UNSPECIFIED CASTING RADII R5 MAX..
6. ⊗ THIS MARK INDICATES THE SURFACES TO BE MACHINED.
7. HEIGHT OF CASTING LETTERS 20mm.
8. CASTING SHALL COMPLY WITH THE REQUIREMENTS OF LATEST APPLICABLE QUALITY WORK INSTRUCTIONS PROCEDURE IN ALL RESPECTS.

SECTION BB

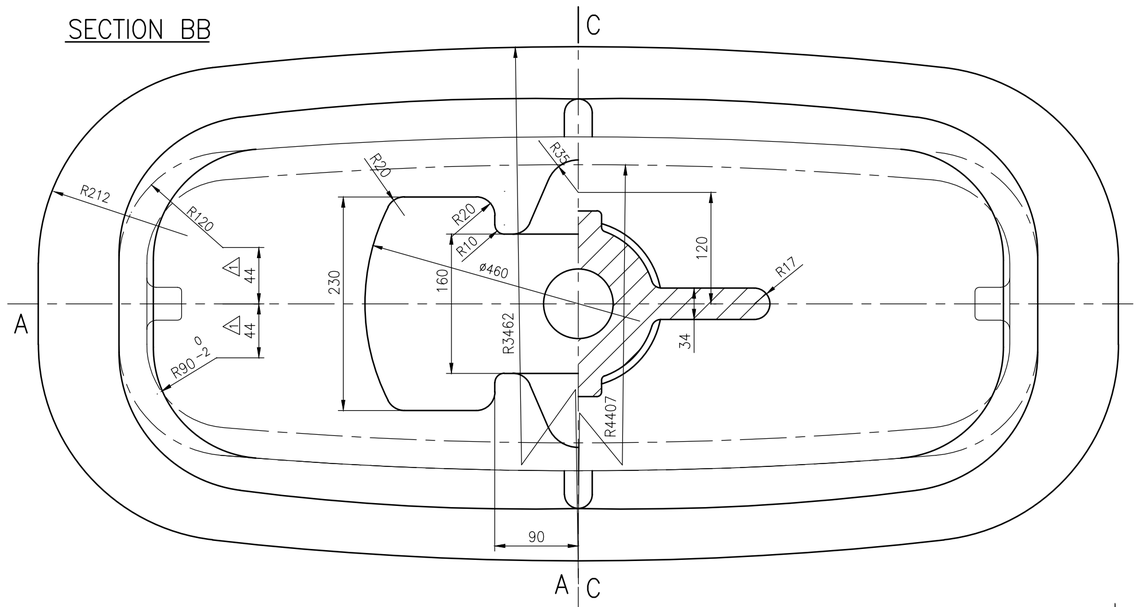

REV	DATE	ALTERED	
03	18.11.14	ALTERED	M.RAMESH
		CHD & APPD	SSK & KRS
		DWG UPDATDED	
02	29.01.14	ALTERED	RAVINDHAR
		CHD & APPD	SSK & KRS
ZONE		SL.No. 02 INCLUDED	
01	17.03.09	ALTERED	VB
		CHD & APPD	MRK
ZONE		DIMENSION 44 WAS 60.7	
		DCP No.800932	

MATL.MARK	SL. No.	DESCRIPTION	MATL CODE	MATL SPECN	HEAT TREATMENT	SCRAP SORT	NET WT (kg)	GROSS WT (kg)	DRAWING No / COMPONENT CODE	ITEM No
WC9	02	–	–	A217 WC9 ATTEST	NT	–	–	62.5	2-V-NH84-08295R / 922032160000	–
WCB	01	–	–	ASTM A216-WCB,CERTIFY	NR	–	–	62.5	2-V-N929-08295R/1 / 922012200000	–

CAUTION: The information on this document is the property of BHARAT HEAVY ELECTRICALS LTD. It must not be used directly or indirectly in any way detrimental to the interest of the company.

TYPE OF PRODUCT OR NAME OF CUSTOMER/PROJECT: REDRAWN WITH REV.1 ON 17.03.09

BHARAT HEAVY ELECTRICALS LTD.,
UNIT: HIGH PRESSURE BOILER PLANT.
TIRUCHIRAPALLI -620014.
365-120

	NAME	SIGN	DATE	NO.OF VAR.
DRN	V.BAIRAVAN		17.03.09	
CHD	R.L.NARAYANAN		17.03.09	
APPD	M.RAJAKUMAR		17.03.09	

DEPT VL | CODE 320 | SCALE N T S | WEIGHT (KG). | REFERENCE INFORMATIONS | NO. OF ITEMS

TITLE: BONNET 32"/150 GV | CARD CODE U 01 | DRAWING NO. 2-V-0000-08295R | REV 03

Size A2

DRAWING NO. 2-V-0000-08454P

ALL DIMENSIONS ARE IN MILLIMETRES. FOR TOLERANCES OF UNTOLERANCED DIMENSIONS DURING MANUFACTURE REFER RELEVANT QCP / QP

SL. No.	DRAWING NUMBER	MATL.SPECN.	MATL. MARK	MATERIAL CODE	Wt.(kg)	DIMENSIONS ØD	DIMENSIONS Ød	DIMENSIONS T	APPLICABLE VALVES
01	2-V-N025-08454P	A216 WCB NR, CERTIFY	WCB	92 201 312	0.62	98	70	23	3"-150C-GV
02	2-V-N033-08454P	A216 WCB NR, CERTIFY	WCB	92 201 310	1.06	132	94	20	4"-300C-GV
03	2-V-N001-08454P	A216 WCB NR, CERTIFY	WCB	92 201 307	1.90	178	145	30	6"-150C-GV
04	2-V-N009-08454P	A216 WCB NR, CERTIFY	WCB	92 201 308	2.70	232	195	29	8"-150C-GV
05	2-V-N057-08454P	A216 WCB NR, CERTIFY	WCB	92 201 313	3.63	286	246	29	10"-150C-GV
06	2-V-N041-08454P	A216 WCB NR, CERTIFY	WCB	92 201 311	4.40	338	297	29	12"-150C-GV
07	2-V-N017-08454P	A216 WCB NR, CERTIFY	WCB	92 201 309	2.50	188	145	30	6"-300C-GV
08	2-V-N089-08454P	A216 WCB NR, CERTIFY	WCB	92 201 315	3.5	242	195	29	8"-300C-GV
09	2-V-N065-08454P	A216 WCB NR, CERTIFY	WCB	92 201 314	5.24	302	246	29	10"-300C-GV
10	2-V-N105-08454P	A216 WCB NR, CERTIFY	WCB	92 201 317	5.60	348	297	29	12"-300C-GV
11	2-V-N297-08454P	A217 WC9 NT, CERTIFY	WC9	92 201 328	1.06	132	94	20	4"-300C-GV
12	2-V-N306-08454P	A217 WC9 NT, CERTIFY	WC9	92 201 326	1.9	178	145	30	6"-150C-GV
13	2-V-N274-08454P	A217 WC9 NT, CERTIFY	WC9	92 201 329	2.70	232	195	29	8"-150C-GV
14	2-V-N305-08454P	A217 WC9 NT, CERTIFY	WC9	92 201 325	3.63	286	246	29	10"-150C-GV
15	2-V-N258-08454P	A217 WC9 NT, CERTIFY	WC9	92 201 327	0.62	98	70	23	3"-300C-GV
16	2-V-N229-08454P	A217 WC9 NT, CERTIFY	WC9	92 201 319	2.5	188	145	30	6"-300C-GV
17	2-V-N230-08454P	A217 WC9 NT, CERTIFY	WC9	92 201 320	3.5	242	195	29	8"-300C-GV
18	2-V-N304-08454P	A217 WC9 NT, CERTIFY	WC9	92 201 324	5.24	302	246	29	10"-300C-GV
19	2-V-N309-08454P	A217 WC9 NT, CERTIFY	WC9	92 201 323	5.60	348	297	29	12"-300C-GV
20	2-V-F502-08454P	A216 WCB NR, CERTIFY	WCB	92 201 330	0.98	102	60	27	3"-600C-GV
21	2-V-F532-08454P	A217 WC9 NT, CERTIFY	WC9	92 201 331	0.98	102	60	27	3"-600C-GV
22	2-V-F503-08454P	A216 WCB NR, CERTIFY	WCB	92 201 332	1.67	130	86	30	4"-600C-GV
23	2-V-F533-08454P	A217 WC9 NT, CERTIFY	WC9	92 201 333	1.67	130	86	30	4"-600C-GV
24	2-V-F504-08454P	A216 WCB NR, CERTIFY	WCB	92 201 334	3.8	184	136	42	6"-600C-GV
25	2-V-F534-08454P	A217 WC9 NT, CERTIFY	WC9	92 201 335	3.8	184	136	42	6"-600C-GV
26	2-V-F505-08454P	A216 WCB NR, CERTIFY	WCB	92 201 336	5.88	232	184	50	8"-600C-GV
27	2-V-F535-08454P	A217 WC9 NT, CERTIFY	WC9	92 201 337	5.88	232	184	50	8"-600C-GV
28	2-V-F506-08454P	A216 WCB NR, CERTIFY	WCB	92 201 338	7.0	284	232	44	10"-600C-GV
29	2-V-F536-08454P	A217 WC9 NT, CERTIFY	WC9	92 201 339	7.0	284	232	44	10-600C-GV
30	2-V-F507-08454P	A216 WCB NR, CERTIFY	WCB	92 201 340	8.7	336	284	46	12"-600C-GV
31	2-V-F537-08454P	A217 WC9 NT, CERTIFY	WC9	92 201 341	8.7	336	284	46	12"-600C-GV
32	2-V-N316-08454P	A216 WCB NR, CERTIFY	WCB	92 201 348	10.6	390	325	38	14"-150C-GV
33	2-V-N350-08454P	A216 WCB NR, CERTIFY	WCB	92 201 349	10.3	431	375	38	16"-150C-GV
34	2-V-N575-08454P	A216 WCB NR, CERTIFY	WCB	92 201 350	13.1	482	425	42	18"-150C-GV
35	2-V-N224-08454P	A216 WCB NR, CERTIFY	WCB	92 201 351	16.1	535	475	44	20"-150C-GV
36	2-V-N799-08454P	A216 WCB NR, CERTIFY	WCB	92 201 352	21.1	640	575	44	24"-150C-GV
37	2-V-N435-08454P	A216 WCB NR, CERTIFY	WCB	92 201 353	7.9	371	321	38	14"-300C-GV
38	2-V-N436-08454P	A216 WCB NR, CERTIFY	WCB	92 201 354	12.5	425	371	48	16"-300C-GV
39	2-V-N437-08454P	A216 WCB NR, CERTIFY	WCB	92 201 355	17.3	525	465	48	20"-300C-GV
40	2-V-K904-08454P	A217 WC9 NT, CERTIFY	WC9	92 201 356	10.6	390	325	38	14"-150C-GV
41	2-V-K905-08454P	A217 WC9 NT, CERTIFY	WC9	92 201 357	10.3	431	375	38	16"-150C-GV
42	2-V-K906-08454P	A217 WC9 NT, CERTIFY	WC9	92 201 358	13.1	482	425	42	18"-150C-GV
43	2-V-K907-08454P	A217 WC9 NT, CERTIFY	WC9	92 201 359	16.1	535	475	44	20"-150C-GV
44	2-V-K908-08454P	A217 WC9 NT, CERTIFY	WC9	92 201 360	21.1	640	575	44	24"-150C-GV
45	2-V-N622-08454P	A217 WC9 NT, CERTIFY	WC9	92 201 361	7.9	371	321	38	14"-300C-GV
46	2-V-N616-08454P	A217 WC9 NT, CERTIFY	WC9	92 201 362	12.5	425	371	48	16"-300C-GV
47	2-V-K909-08454P	A217 WC9 NT, CERTIFY	WC9	92 201 363	17.3	525	465	48	20"-300C-GV
48	2-V-F606-08454P	A217 CA15 NT, CERTIFY	CA15	92 201 443	7.0	284	232	44	10"-600C-GV
49	2-V-NA60-08454P	A351 CF8 SH, CERTIFY	CF8	92 201 504	5.6	348	297	29	12"-300C-GV
50	2-V-Z030-08454P	A351-CF8 CERTIFY	CF8	92 201 515	3.5	195	142	32	6"-300C-FV
51	2-V-Z042-08454P	A351-CF8M CERTIFY	CF8M	92 201 516	3.5	195	142	32	6"-300C-FV
52	2-V-NE67-08454P	A351-CF8M CERTIFY	CF8M	92 201 652	5.24	302	246	29	10"-300C-GV
53	2-V-F510-08454P	A351 CF8 SH, CERTIFY	CF8	92 201 826	8.7	336	284	46	12"-600C-GV
54	2-V-P545-08454P	A351 CF8M SH, CERTIFY	CF8M	92 201 893	9.5	268	190	43	10"-300C-RV
55	2-V-F889-08454P	A351 CF8M SH, CERTIFY	CF8M	92 202 056	5.9	232	184	50	8"-600C-GV
56	2-V-ND10-08454P	A351 CF8M SH, CERTIFY	CF8M	92 203 145	1.1	169	147	26	6"-150C-GV (ECO)
57	2-V-ND15-08454P	A351 CF8M SH, CERTIFY	CF8M	92 203 146	1.8	223	198	28	8"-150C-GV (ECO)
58	2-V-ND12-08454P	A351 CF8M SH, CERTIFY	CF8M	92 203 129	2.5	277	249	27	10"-150C-GV (ECO)
59	2-V-ND23-08454P	A351 CF8M SH, CERTIFY	CF8M	92 203 148	6.8	335	299	30	12"-300C-GV (ECO)
60	2-V-ND14-08454P	A351 CF8M SH, CERTIFY	CF8M	92 203 149	1.3	174	146	23	6"-300C-GV (ECO)
61	2-V-ND17-08454P	A351 CF8M SH, CERTIFY	CF8M	92 203 150	2.1	228	198	26	8"-300C-GV (ECO)
62	2-V-ND21-08454P	A351 CF8M SH, CERTIFY	CF8M	92 203 151	3.5	285	250	30	10"-300C-GV (ECO)
63	2-V-ND20-08454P	A217 WC9 NT, CERTIFY	WC9	92 203 183	6.8	335	299	30	12"-300C-GV (ECO)
64	2-V-F921-08454P	A351 CF8M SH, CERTIFY	CF8M	92 203 193	0.98	102	60	27	3"-600C-GV
65	2-V-ND59-08454P	A351 CF8 SH, CERTIFY	CF8	92 203 298	3.5	285	250	30	10"-300C-GV
66	2-V-NJ28-08454P	A351 CF8 SH, CERTIFY	CF8	92 203 330	1.8	223	198	28	8"-150C-GV (ECO)
67	2-V-NJ29-08454P	A351 CF8 SH, CERTIFY	CF8	92 203 331	2.5	277	249	27	10"-150C-GV (ECO)
68	2-V-ND72-08454P	A351 CF8 SH, CERTIFY	CF8	92 203 339	1.1	169	147	26	6"-150C-GV (ECO)
69	2-V-Z094-08454P	A351 CF8M SH, CERTIFY	CF8M	92 203 282	7.9	624	590	31	24"150C-FV
70	2-V-ND92-08454P	A351 CF8 SH, CERTIFY	CF8	92 203 365	1.3	174	146	23	6"-300C-GV (ECO)
71	2-V-U556-08454P	A351 CF8 SH, CERTIFY	CF8	92 203 400	7.0	284	232	44	10"-600C-GV
72	2-V-F912-08454P	A351 CF8 SH, CERTIFY	CF8	92 203 449	0.98	102	60	27	3" -600C-GV
73	2-V-F913-08454P	A351 CF8 SH, CERTIFY	CF8	92 203 452	1.67	130	86	30	4" -600C-GV
74	2-V-F914-08454P	A351 CF8M SH, CERTIFY	CF8M	92 203 462	1.67	130	86	30	4" -600C-GV
75	2-V-F528-08454P	A351 CF8 SH, CERTIFY	CF8	92 203 461	3.8	184	136	42	6" -600C-GV
76	2-V-U604-08454P/1	A351 CF8M SH, CERTIFY	CF8M	92 203 489	26.2	650	560	39 (19)	24" -150C-FV
77	2-V-NC26-08454P	A216 WCB NR, CERTIFY	WCB	92 203 515	5.11	284	234	32	10"-150C-GV
78	2-V-NP33-08454P/1	SA995 CD3MN REFER NOTE, CERTIFY	CD3MN	92 203 496	1.1	169	147	26	6"-150C-GV
79	2-V-NP35-08454P/1			92 203 497	1.8	223	198	28	8"-150C-GV
80	2-V-NJ95-08454P/1			92 203 498	10.9	390	325	38	14"-150C-GV
81	2-V-P725-08454P			92 203 610	3.0	139	74	35	4"-C300-SV
82	2-V-P726-08454P			92 203 606	4.7	182	124	43	6"-C300-SV
83	2-V-P727-08454P			92 203 590	8.0	238	169	46	8"-C300-RV
84	2-V-P728-08454P			92 203 594	10.2	270	194	47	10"-300C-RV
85	2-V-NP55-08454P			92 203 636	3.6	285	249	30	10"-150/300-GV
86	2-V-NP56-08454P			92 203 588	4.5	336	299	31	12"-150/300-GV
87	2-V-Z113-08454P			92 203 628	1.6	136	96	28	4"-150C-FV
88	2-V-Z114-08454P			92 203 629	11.3	432	374	39	16"-150C-FV
89	2-V-NP58-08454P	A351 CF8 SH, CERTIFY	CF8	92 203 736	2.2	228	198	28	8"-150/300-GV
90	2-V-NP60-08454P			92 203 742	4.5	336	299	31	12"-150/300-GV
# 91	2-V-U937-08454P			92 203 751	1.4	174	146	26	6"-150/300-GV
# 92	2-V-U940-08454P			92 203 746	4.5	336	299	31	12"-150/300-GV
# 93	2-V-U951-08454P			92 203 740	2.2	228	198	28	8"-150/300-GV
94	2-V-P764-08454P			92 203 791	27.7	383	284	68	14"-600C-RV
# 95	2-V-U961-08454P			92 203 795					
# 96	2-V-U939-08454P			92 203 775	9.5	270	194	47	10"-300C-RV
97	2-V-P762-08454P			92 203 774					

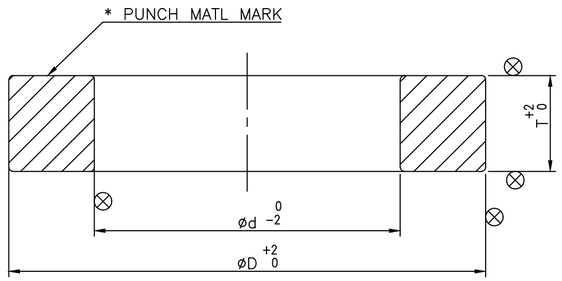

NOTES:-

1. CASTING SHALL BE PROOF MACHINED TO THE DIMENSIONS SHOWN INTHE TABULATION.
2. NECESSARY MACHINING ALLOWANCES HAVE BEEN ADDED ON ALL MACHINABLE SURFACES
3. PERMISIBLE DIMENSIONAL DEVIATIONS OF NON TOLERANCED CASTING DIMENSIONS – REFER LATEST APPLICABLE QUALITY PROCEDURE.
4. CASTING SHALL COMPLY WITH THE REQUIREMENTS OF LATEST APPLICABLE QUALITY PROCEDURE.
5. UNSPECIFIED CASTING RADII 3 – 5 MM
6. HEAT TREATMENT FOR SA995 CD3MN AS PER ASME STANDARD SA-995 TABLE 1
   (HEAT TO 2050°F [1120°C] MINIMUM FOR SUFFICIENT TIME TO HEAT CASTING UNIFORMLY TO TEMPERATURE AND WATER QUENCH, OR THE CASTING MAY BE FURNACE COOLED TO 1850°F [1010°C] MINIMUM, HOLD FOR 15 MIN MINIMUM AND THEN WATER QUENCH. A RAPID COOL BY OTHER MEANS MAY BE EMPLOYED IN LIEU OF WATER QUENCH.)
7. # MARKED ITEMS ARE IGC TEST SHALL BE CONDUCTED.

REV	DATE	ALTERED	
19	10.10.18	R.P.SINGH	CHD & APPD SSK & KRS
		SL.No. 81 TO 97 INCLUDED FOR SL.NO.76 DIMENSIONS 560 & 39 WERE 500 AND 48 RESPECTIVELY. NOTES No. 7 ADDED	
18	30.01.18	S.SATHEES	CHD & APPD SSK & KRS
		FOR SL.NO.78,79&80 MATERIAL SPECIFICATION CHANGED TO CD3MN FROM 6A NOTE SL.NO.06 HEAT TREATMENT PROCESS REVISED	
17	04.12.17	R.P.SINGH	CHD & APPD SSK & KRS
ZONE		SL.No.78,79 & 80 INCLUDED	

CAUTION: The information on this document is the property of BHARAT HEAVY ELECTRICALS LTD. It must not be used directly or indirectly in any way detrimental to the interest of the company.

No OF F	DESCRIPTION	MATL CODE	MATL SPECN	HEAT TREATMENT	SCRAP SORT	NET WT (kg)	GROSS WT (kg)	DRAWING No	ITEM No
–	–	–	–	–	–	–	–	–	–

TYPE OF PRODUCT OR NAME OF CUSTOMER/PROJECT: CS

DRAWING REDRAWN WITH REV NO 17 ON 04.12.17

BHARAT HEAVY ELECTRICALS LTD., UNIT: HIGH PRESSURE BOILER PLANT. TIRUCHIRAPALLI -620014.

365-120

	NAME	SIGN	DATE	NO.OF VAR.
DRN	A.S.PANDY		01.06.07	
CHD	T.R.RAMAMURTHY		01.06.07	
APPD	P.BOOMINATHAN		01.06.07	

DEPT VL | CODE 320 | SCALE NTS. | WEIGHT (KG). – | REFERENCE INFORMATIONS CAD:C208454P | NO. OF ITEMS

TITLE: SEAT RING (PROOF MACHINED CASTING)

CARD CODE: U 01

DRAWING NO. 2-V-0000-08454P

REV 19

Size A2

DRAWING NO. 2-V-0000-13591R

ALL DIMENSIONS ARE IN MILLIMETRES. FOR TOLERANCES OF UNTOLERANCED DIMENSIONS DURING MANUFACTURE REFER RELEVANT QCP / QP

SECTION – AA

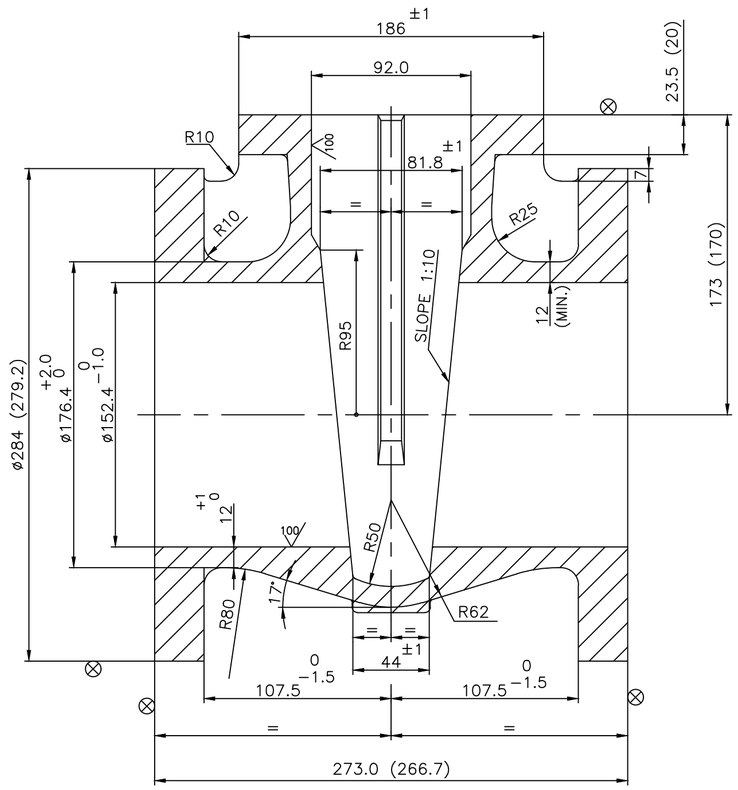

SECTION – BB

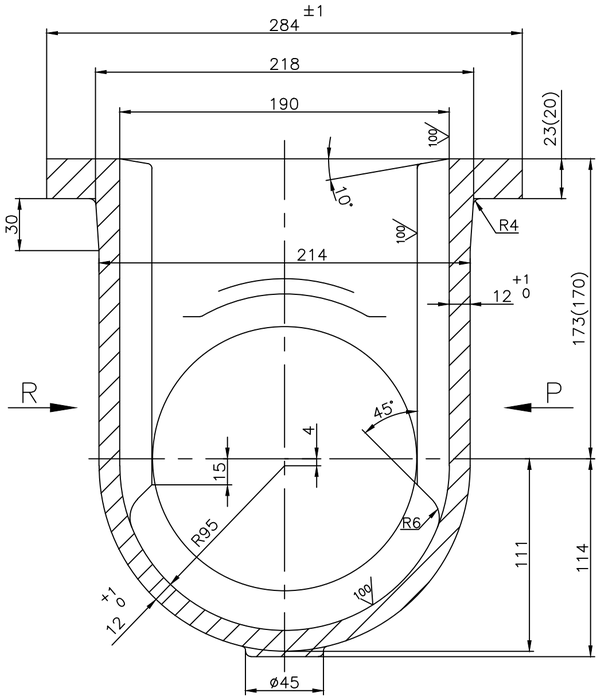

VIEW – P

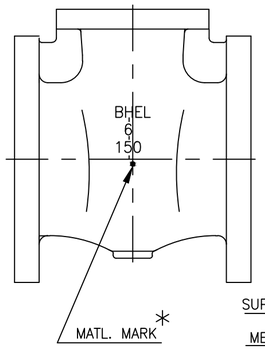

VIEW – Q

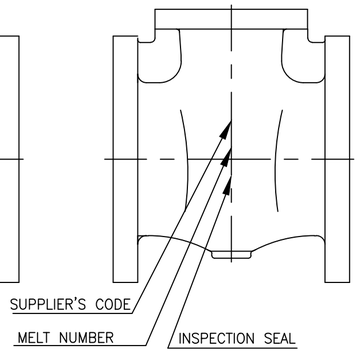

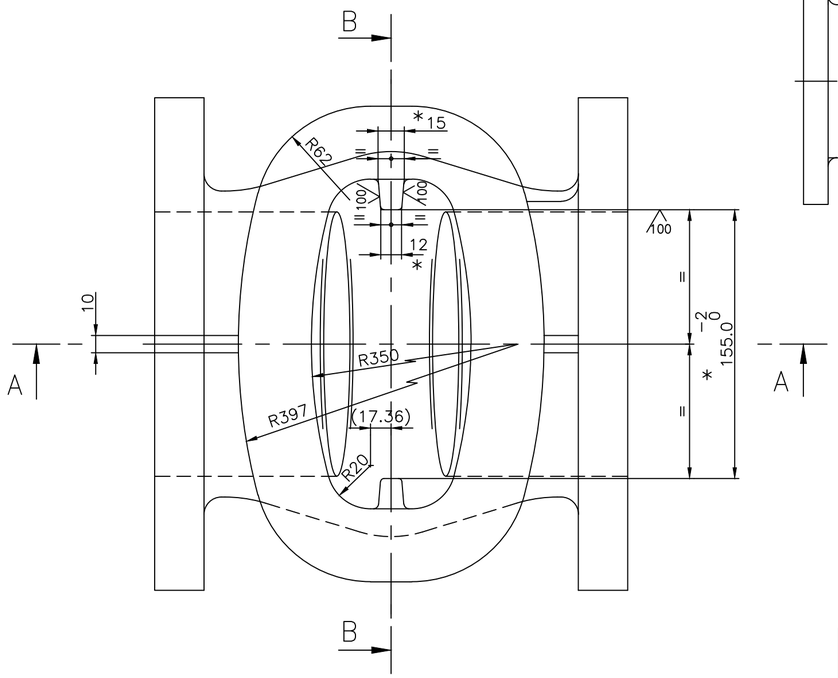

NOTE:–

01. NECESSARY MACHINING ALLOWANCES HAVE BEEN ADDED ON ALL MACHINABLE SURFACES.
02. PERMISSIBLE DEVIATIONS OF NON TOLERANCED CASTING DIMENSIONS REFER APPLICABLE TDC
03. FINISH MACHINED DIMENSIONS ARE INDICATED WITHIN BRACKETS FOR INFORMATION ONLY.
04. LETTERS– BHEL,SIZE,MATL.& SUPPLIERS CODE ARE TO BE CAST IN THE INDICATED ZONE.
05. CASTING SHALL COMPLY WITH THE REQUIREMENTS OF APPLICABLE SPECIFICATION.
06. UNSPECIFIED CASTING RADII = R2 TO R3
07. HEIGHT OF CASTING LETTERS = 12 mm
08. ⊗ INDICATES SURFACE TO BE MACHINED.
09. 100 INDICATED CASTING SURFACES SHALL BE OF HIGH QUALITY WITHOUT SURFACE UNEVENNESS.
10. HEAT TREATMENT FOR SA995 CD3MN AS PER ASME STANDARD SA–995 TABLE 1
    (HEAT TO 2050°F [1120°C] MINIMUM FOR SUFFICIENT TIME TO HEAT CASTING UNIFORMLY TO TEMPERATURE AND WATER QUENCH, OR THE CASTING MAY BE FURNACE COOLED TO 1850°F [1010°C] MINIMUM, HOLD FOR 15 MIN MINIMUM AND THEN WATER QUENCH. A RAPID COOL BY OTHER MEANS MAY BE EMPLOYED IN LIEU OF WATER QUENCH.) SA351 CF8
11. # MARKED ITEMS IGC TEST SHALL BE CONDUCTED.

* SPECIAL NOTE

01. GUIDE BAR DIMENSIONS TO BE MAINTAINED WITHIN THE TOLERENCE INDICATED.
02. BOTH GUIDE RIBS TO BE COPLANAR AND TRUELY VERTICAL.

*MATL. MARK	SL. No.	DESCRIPTION	MATL CODE	MATL SPECN	HEAT TREATMENT	SCRAP SORT	NET WT (kg)	GROSS WT (kg)	DRAWING No / COMPONENT CODE	ITEM No
CF3M	06	CASTING	–	SA351 CF3M ATTESTED	SH	–	42.4	–	2–V–NP76–13591R / 922038490000	001
CF8	#05	CASTING	–	SA351 CF8 ATTESTED	SH	–	42.4	–	2–V–U937–13591R / 922037490000	001
CD3MN	04	CASTING	–	SA995 Gr.CD3MN PRODUCT ATTEST	REFER NOTE	–	42.4	–	2–V–NP33–13591R/1 / 922034940000	001
CF8M	03	CASTING	–	SA351 CF8M ATTESTED	SH	–	42.4	–	2–V–NP27–13591R / 922034830000	001
CF8	02	CASTING	–	SA351 CF8 ATTESTED	SH	–	42.4	–	2–V–NP03–13591R / 922033890000	001
WCB	01	CASTING	–	ASTM A216 WCB– ATTESTED	NORMALISED	–	42.4	–	2–V–NC06–13591R/2 / 922014250000	001

REV	DATE	ALTERED	R.P.SINGH
07	30.05.19	CHD & APPD	SSK & KRS
	SL.No.06 INCLUDED		

REV	DATE	ALTERED	R.P.SINGH
06	08.11.18	CHD & APPD	SSK & KRS
	SL.No.05 INCLUDED NOTE No. 11 INCLUDED		

REV	DATE	ALTERED	R.P.SINGH
05	25.01.18	CHD & APPD	SSK & KRS
ZONE			
01.	FOR SL.NO.04 MATERIAL SPECIFICATION CHANGED TO CD3MN FORM 6A		
02.	NOTE SL.NO.10 HEAT TREATMENT PROCESS REVISED		

CAUTION: The information on this document is the property of BHARAT HEAVY ELECTRICALS LTD. It must not be used directly or indirectly in any way detrimental to the interest of the company.

TYPE OF PRODUCT OR NAME OF CUSTOMER/PROJECT

DRAWING REDRAWN WITH REV NO 05 ON 25.01.18

BHARAT HEAVY ELECTRICALS LTD.,
UNIT: HIGH PRESSURE BOILER PLANT.
TIRUCHIRAPALLI -620014.
365–120

	NAME	SIGN	DATE	NO.OF VAR.
DRN	M.SRINIVASAN		15.03.04	
CHD	P.BOOMINATHAN		15.03.04	
APPD	K.S.RAMAN		15.03.04	

DEPT VL
CODE 320
SCALE NTS
WEIGHT (KG). REF. TABLE
REFERENCE INFORMATIONS
CAD :C213591R
NO. OF ITEMS

TITLE
BODY
(6" – C150–FL)

CARD CODE U 01

DRAWING NO. 2–V–0000–13591R

REV 07

Size A2

DRAWING NO. 2-V-0000-13684R

ALL DIMENSIONS ARE IN MILLIMETRES. FOR TOLERANCES OF UNTOLERANCED DIMENSIONS DURING MANUFACTURE REFER RELEVANT QCP / QP

SECTION BB

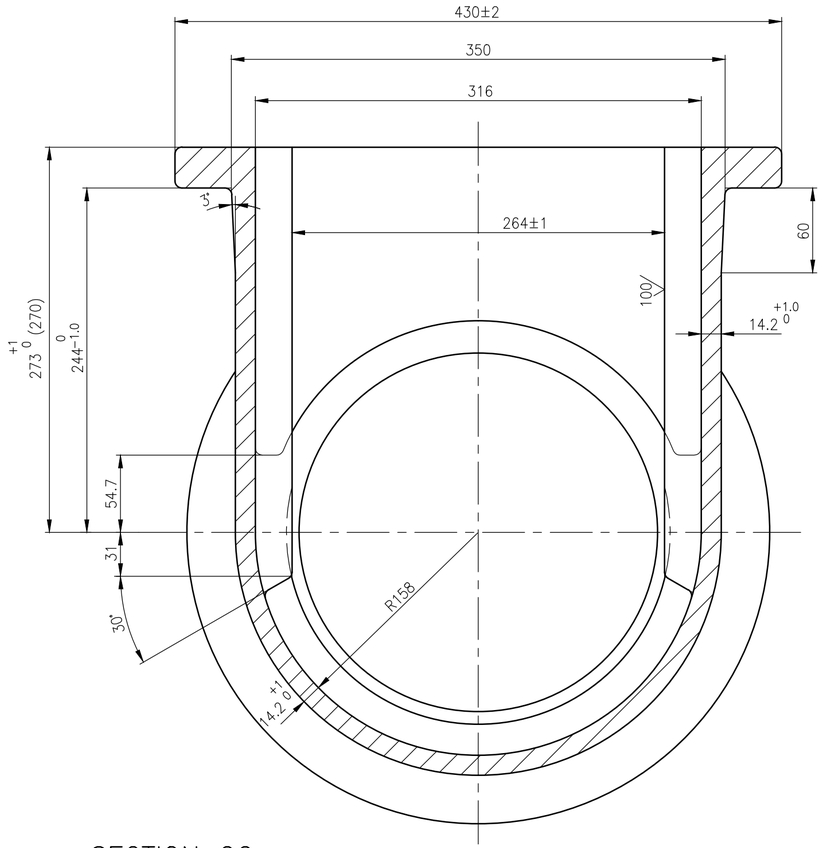

SECTION CC

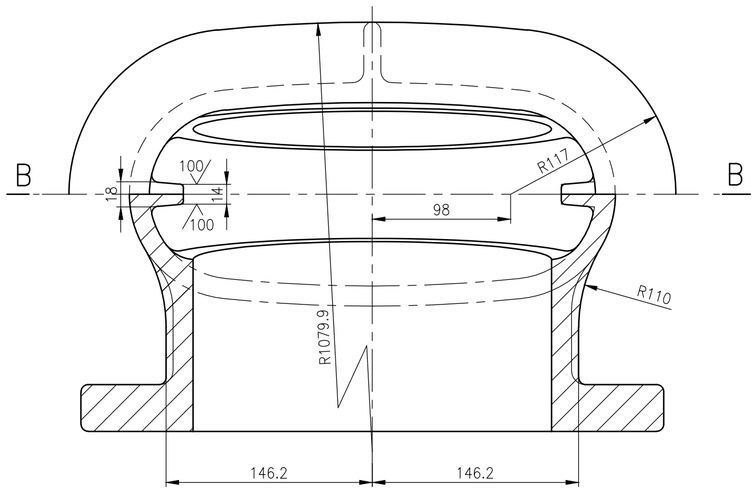

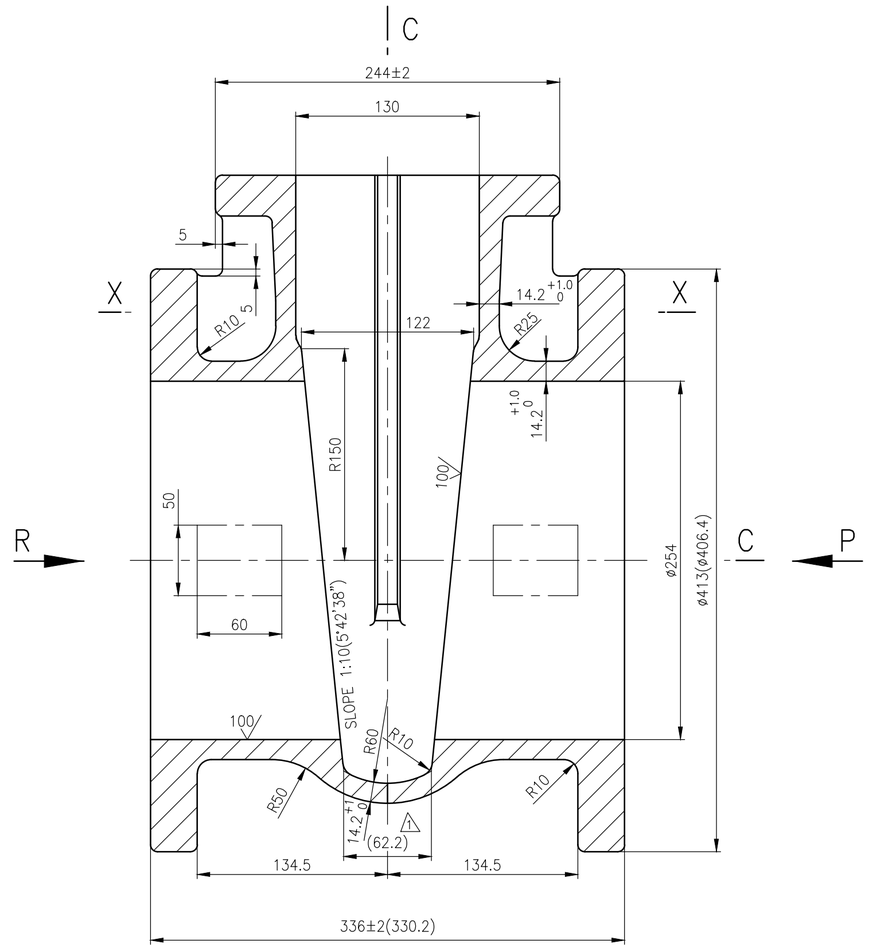

SECTION XX

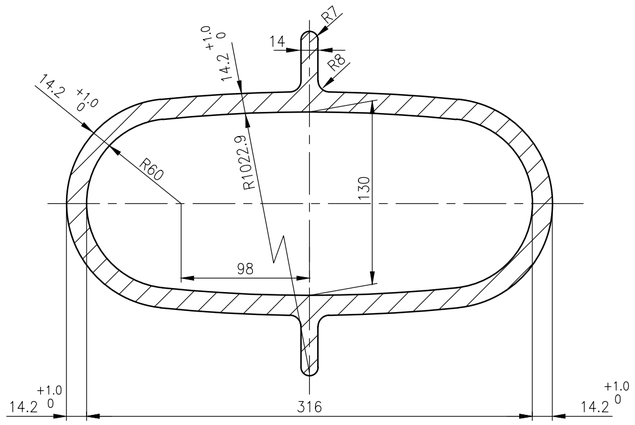

MARKING DETAILS ON CASTING

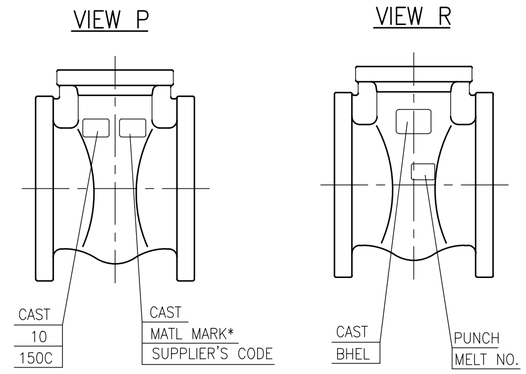

NOTES:

1. NECESSARY ALLOWANCES HAVE BEEN ADDED ON ALL MACHINABLE SURFACES.
2. PERMISSIBLE DIMENSIONAL DEVIATIONS OF CASTING SURFACES REFER LATEST APPLICABLE QUALITY WORK INSTRUCTION
3. FINISH MACHINED DIMENSIONS ARE INDICATED WITHIN BRACKETS FOR INFORMATION.
4. 100/ CASTING SURFACES MUST BE OF HIGH QUALITY WITHOUT SURFACE UNEVENNESS.
5. UNSPECIFIED CASTING RADIOUS 3mm.
6. ⊗ SURFACE TO BE MACHINED.
7. HEIGHT OF CASTING LETTERS 30mm.
8. CASTING SHALL GENERALLY COMPLY WITH THE REQUIREMENTS OF LATEST APPLICABLE QUALITY WORK INSTRUCTION IN ALL RESPECTS.
9. PUNCHING DETAILS SHALL BE MARKED ONLY ON RAISED FLAT SURFACE GIVEN AT ZONE B8

SL. No.	DRAWING No.	MATL. CODE	MATL. SPECN.	*MATL. MARK	ITEM No.
03	2-V-ND95-13684R	922033720000	SA351 CF8M, SH ATTEST	CF8M	001
02	2-V-NJ29-13684R	922033270000	SA351 CF8, SH ATTEST	CF8	001
01	2-V-NC10-13684R/1	922014730000	SA216 WCB, SH ATTEST	WCB	001

No OFF	DESCRIPTION	MATL CODE	MATL SPECN	HEAT TREATMENT	SCRAP SORT	NET WT (kg)	GROSS WT (kg)	DRAWING No	ITEM No
–	–	–	–	–	–	–	–	–	–

REV	DATE	ALTERED	
03	19.10.15	M.SELVAM	CHD & APPD MS & SSK
	SL. No. 03 INCLUDED		
02	01.10.14	A.MARIMUTHU	CHD & APPD MS & SSK
	SL. No. 02 INCLUDED		
1	29.11.05	VB	CHD & APPD RLN&MRK
ZONE	DIMENSION (62.2) WAS (72.2)		
	DCP No.800535		

CAUTION: The information on this document is the property of BHARAT HEAVY ELECTRICALS LTD. It must not be used directly or indirectly in any way detrimental to the interest of the company.

TYPE OF PRODUCT
OR NAME OF
CUSTOMER/PROJECT

BHARAT HEAVY ELECTRICALS LTD.,
UNIT: HIGH PRESSURE BOILER PLANT.
TIRUCHIRAPALLI -620014.
365-120

	NAME	SIGN	DATE	NO.OF VAR.
DRN	V.BAIRAVAN		10.10.03	
CHD	R.L.NARAYANAN		10.10.03	
APPD	M.RAJAKUMAR		10.10.03	

DEPT VL
CODE 320
SCALE N T S
WEIGHT (KG). 105
REFERENCE INFORMATIONS CAD REF.2V13684R
NO. OF ITEMS

TITLE BODY 10"/150 CLASS GV
CARD CODE U 01
DRAWING NO. 2-V-0000-13684R
REV 03

Size A2

DRAWING NO. 2-V-0000-13687R

ALL DIMENSIONS ARE IN MILLIMETRES. FOR TOLERANCES OF UNTOLERANCED DIMENSIONS DURING MANUFACTURE REFER RELEVANT QCP / QP

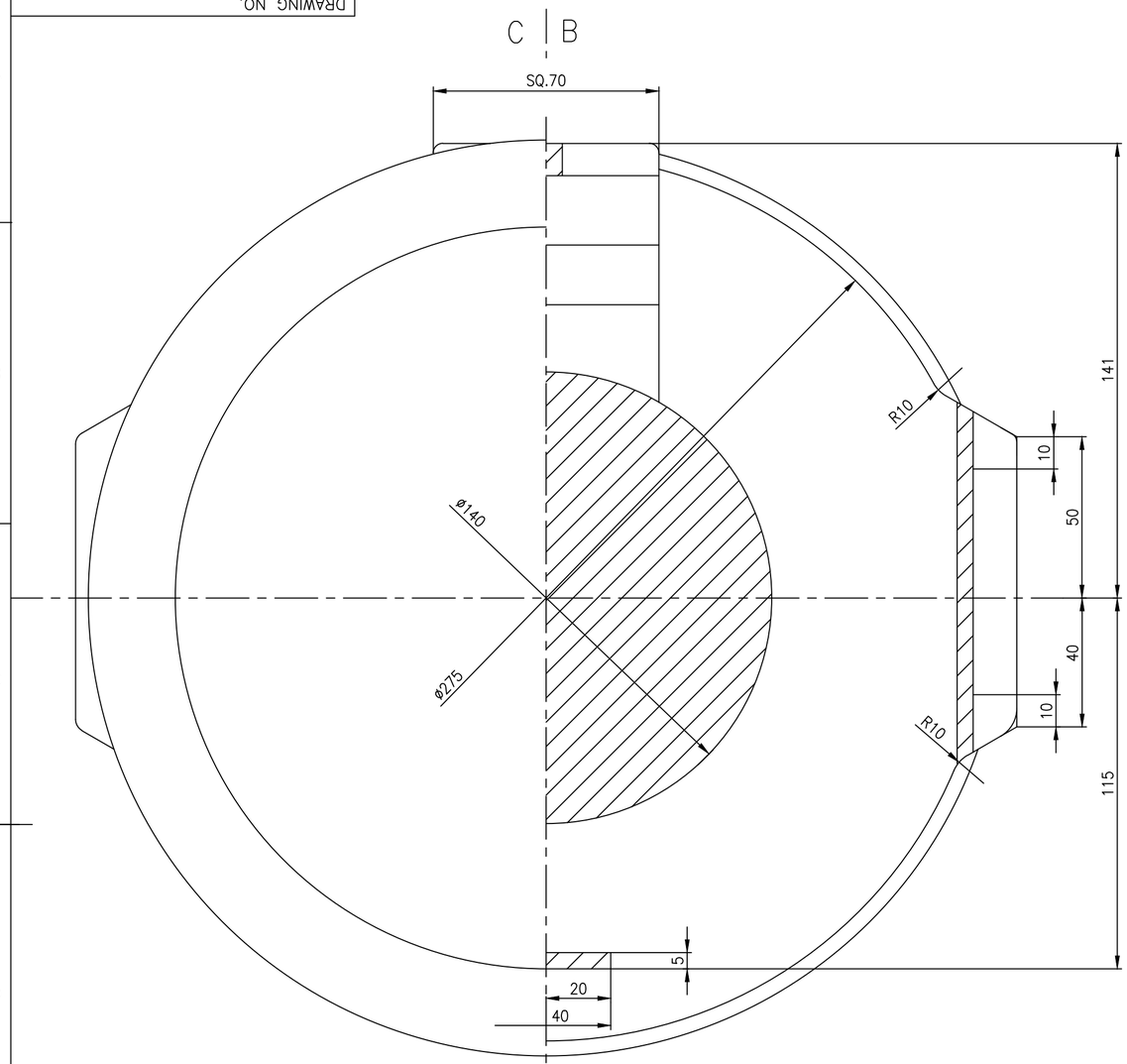

SECTION BB

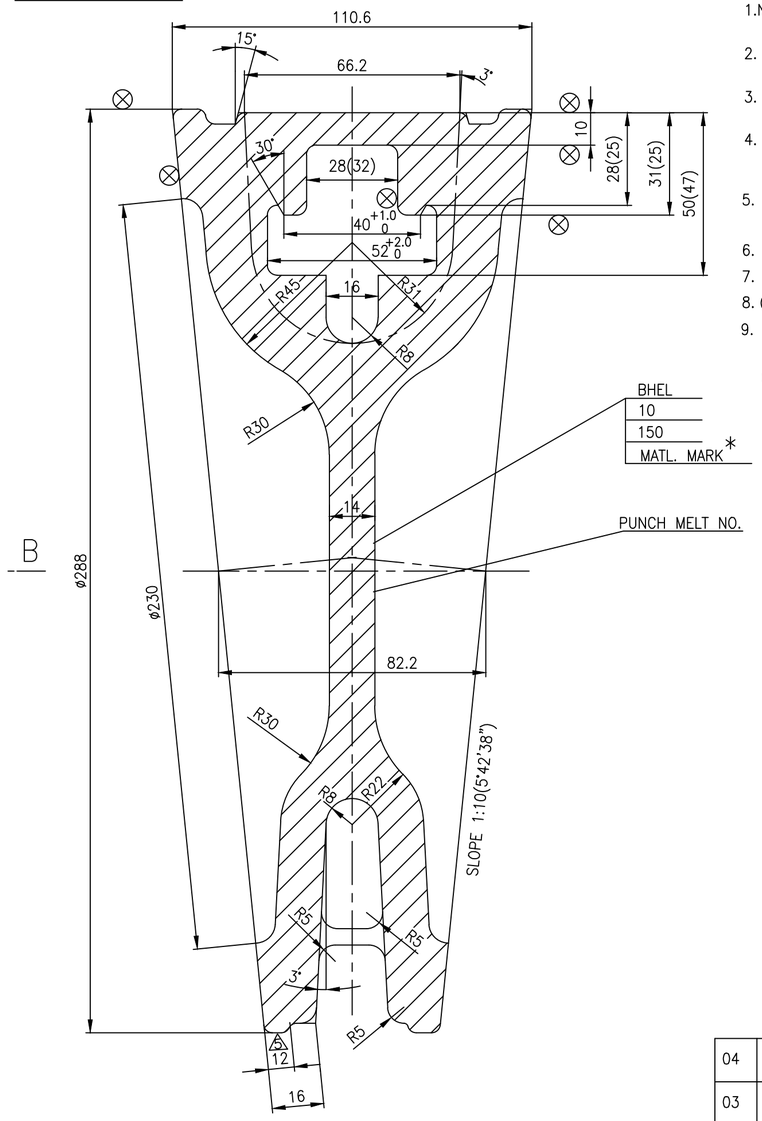

NOTES:

1. NECESSARY MACHINING ALLOWANCES HAVE BEEN ADDED ON ALL MACHINABLE SURFACES.
2. FOR PERMISSIBLE DEVIATIONS ON NON TOLERANCED CASTING DIMENSION REFER APPLICABLE TDC
3. FINISH MACHINED DIMENSIONS ARE INDICATED WITHIN BRACKETS FOR INFORMATION ONLY.
4. LETTERS– SIZE. MAYL.& SUPPLIERS CODE ARE TO BE CAST IN THE INDICATED ZONE.
5. CASTING SHALL COMPLY WITH THE REQUIREMENTS OF APPLICABLE TDC
6. UNSPECIFIED CASTING RADII = RS TO R3
7. HEIGHT OF CASTING LETTERS =5 mm
8. ⊗ INDICATES SURFACE TO BE MACHINED
9. HEAT TREATMENT FOR SA995 CD3MN AS PER ASME STANDARD SA–995 TABLE 1
   (HEAT TO 2050°F [1120°C] MINIMUM FOR SUFFICIENT TIME TO HEAT CASTING UNIFORMLY TO TEMPERATURE AND WATER QUENCH, OR THE CASTING MAY BE FURNACE COOLED TO 1850°F [1010°C] MINIMUM, HOLD FOR 15 MIN MINIMUM AND THEN WATER QUENCH. A RAPID COOL BY OTHER MEANS MAY BE EMPLOYED IN LIEU OF WATER QUENCH.)

SECTION CC

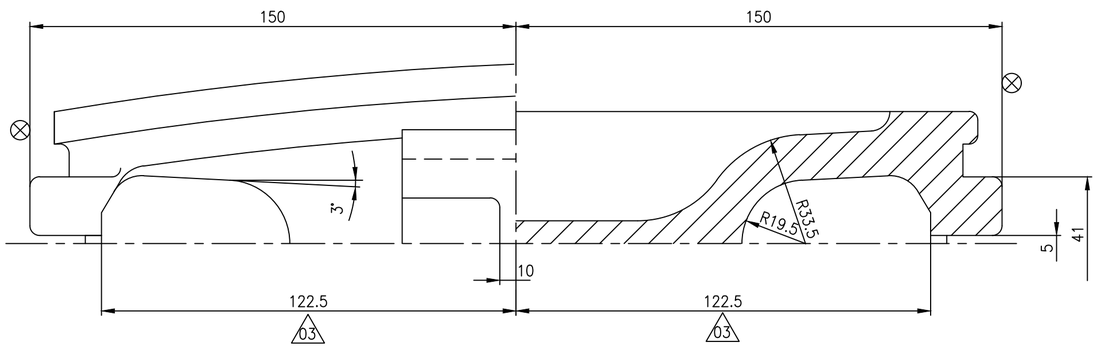

SL. No.	DRAWING No.	MATL. CODE	MATL. SPECN.	*MATL. MARK	ITEM No.
04	2–V–NP55–13687R/1	922036340000	SA995 CD3MN CERTIFY, REF. NOTE	CD3MN	004
03	2–V–NJ29–13687R/2	922033280000	A351 CF8 CERTIFY,SH	CF8	004
02	2–V–ND12–13687R/2	922031310000	A351 CF8M CERTIFY,SH	CF8M	004
01	2–V–NC10–13687R/2	922014750000	A216 WCB CERTIFY,NR	WCB	004

No OFF	DESCRIPTION	MATL CODE	MATL SPECN	HEAT TREATMENT	SCRAP SORT	NET WT (kg)	GROSS WT (kg)	DRAWING No	ITEM No
–	–	–	–	–	–	–	–	–	–

TYPE OF PRODUCT
OR NAME OF
CUSTOMER/PROJECT

BHARAT HEAVY ELECTRICALS LTD.,
UNIT: HIGH PRESSURE BOILER PLANT.
TIRUCHIRAPALLI -620014.
365–120

	NAME	SIGN	DATE	NO.OF VAR.
DRN	V.BAIRAVAN		20.05.05	
CHD	R.L.NARAYANAN		20.05.05	
APPD	M.RAJAKUMAR		20.05.05	

DEPT VL
CODE 320
SCALE N T S
WEIGHT (KG). 19.2
REFERENCE INFORMATIONS CAD REF.C213687R
NO. OF ITEMS

TITLE WEDGE 10"/150 CLASS GV
CARD CODE U 01
DRAWING NO. 2–V–0000–13687R
REV 05

CAUTION: The information on this document is the property of BHARAT HEAVY ELECTRICALS LTD. It must not be used directly or indirectly in any way detrimental to the interest of the company.

REV	DATE	ALTERED	CHD & APPD	REMARKS
05	24.01.19	R.P.SINGH	SSK & KRS	DIMN 12 WAS 8
04	12.12.18	R.P.SINGH	SSK & KRS	SL. No. 04 INCLUDED NOTES No. 09 INCLUDED
03	16.02.18	RAVI PRATAP SINGH	SSK & KRS	DIMENSION 122.5 WAS 127.5.
02	01.10.14	A.MARIMUTHU	MS & SSK	SL.NO. 03 INCLUDED
01	28.05.13	M.S	SSK&KRS	SL.NO. 02 INCLUDED

ZONE

Size A2

CORPORATE DRG ID:TP-DG-2-V-0000-14084R/05

DRAWING NO. 2-V-0000-14084R

ALL DIMENSIONS ARE IN MILLIMETRES. FOR TOLERANCES OF UNTOLERANCED DIMENSIONS DURING MANUFACTURE REFER RELEVANT QCP / QP

SL. No.	DRAWING NUMBER	MATL.SPECN.	TYPE No.	MATL. MARK	MATERIAL CODE	Wt.(kg)	DIMENSIONS SQ.A	ØD	L	L1	L2	L3	L4	L5	H	R1	R2	APPLICABLE VALVES
01	2-V-5144-14084R	A216 WCB NR, CERTIFY	5144	WCB	92 201 664	2.00	66	38	55	38	32	18	6	6	102.5	60	20	4"-150C & 300C-FV
02	2-V-5182-14084R	A217 WC9 N&T, CERTIFY	5182	WC9	92 201 665	2.00	66	38	55	38	32	18	6	6	102.5	60	20	4"-150C & 300C-FV
03	2-V-Z012-14084R	A351 CF8M SH, CERTIFY	Z012	CF8M	92 201 666	2.00	66	38	55	38	32	18	6	6	102.5	60	20	4"-150C & 300C-FV
04	2-V-5173-14084R	A216 WCB NR, CERTIFY	5173	WCB	92 201 667	3.65	85	38	65	48	38	26	10.5	6	132	75	25	6"-150C & 300C-FV
05	2-V-5193-14084R	A217 WC9 N&T, CERTIFY	5193	WC9	92 201 668	3.65	85	38	65	48	38	26	10.5	6	132	75	25	6"-150C & 300C-FV
06	2-V-Z042-14084R	A351 CF8M SH, CERTIFY	Z042	CF8M	92 201 669	3.65	85	38	65	48	38	26	10.5	6	132	75	25	6"-150C & 300C-FV
07	2-V-5150-14084R	A216 WCB NR, CERTIFY	5150	WCB	92 201 670	7.30	105	50	80	60	48	34	12	7	160	85	25	8"-150C & 300C-FV
08	2-V-5195-14084R	A217 WC9 N&T, CERTIFY	5195	WC9	92 201 671	7.30	105	50	80	60	48	34	12	7	160	85	25	8"-150C & 300C-FV
09	2-V-Z048-14084R	A351 CF8M SH, CERTIFY	Z048	CF8M	92 201 672	7.30	105	50	80	60	48	34	12	7	160	85	25	8"-150C & 300C-FV
10	2-V-5158-14084R	A216 WCB NR, CERTIFY	5158	WCB	92 201 771	0.75	45	32	50	30	24	10	6.6	7	64	28	12	2"-150C-FV
11	2-V-Z004-14084R	A351 CF8 SH, CERTIFY	Z004	CF8	92 201 772	0.75	45	32	50	30	24	10	6.6	7	64	28	12	2"-150C-FV
12	2-V-Z057-14084R	A351 CF8M SH, CERTIFY	Z057	CF8M	92 201 773	0.75	45	32	50	30	24	10	6.6	7	64	28	12	2"-150C-FV
13	2-V-5153-14084R	A216 WCB NR, CERTIFY	5153	WCB	92 201 774	0.86	45	34	50	30	26	12	4.1	7	78	28	16	2"-300C-FV
14	2-V-Z032-14084R	A351 CF8 SH, CERTIFY	Z032	CF8	92 201 775	0.86	45	34	50	30	26	12	4.1	7	78	28	16	2"-300C-FV
15	2-V-5198-14084R	A217 WC6 N&T, CERTIFY	5198	WC6	92 201 776	0.86	45	34	50	30	26	12	4.1	7	78	28	16	2"-300C-FV
16	2-V-5157-14084R	A216 WCB NR, CERTIFY	5157	WCB	92 201 777	0.90	45	34	50	30	26	12	1.9	7	89.5	30	16	3"-150C-FV
17	2-V-5199-14084R	A351 CF8 SH, CERTIFY	5199	CF8	92 201 778	0.90	45	34	50	30	26	12	1.9	7	89.5	30	16	3"-150C-FV
18	2-V-Z024-14084R	A351 CF8M SH, CERTIFY	Z024	CF8M	92 201 779	0.90	45	34	50	30	26	12	1.9	7	89.5	30	16	3"-150C-FV
19	2-V-5152-14084R	A216 WCB NR, CERTIFY	5152	WCB	92 201 780	1.21	54	34	50	33	30	16	4.9	7	89.5	32	16	3"-300C-FV
20	2-V-Z005-14084R	A217 WC9 N&T, CERTIFY	Z005	WC9	92 201 781	1.21	54	34	50	33	30	16	4.9	7	89.5	32	16	3"-300C-FV
21	2-V-Z015-14084R	A351 CF8 SH, CERTIFY	Z015	CF8	92 201 782	1.21	54	34	50	33	30	16	4.9	7	89.5	32	16	3"-300C-FV
22	2-V-Z058-14084R	A351 CF8M SH, CERTIFY	Z058	CF8M	92 201 783	1.21	54	34	50	33	30	16	4.9	7	89.5	32	16	3"-300C-FV
23	2-V-Z066-14084R	A351 CF8M SH, CERTIFY	Z066	CF8M	92 201 784	0.86	45	34	50	30	26	12	4.1	7	78	28	16	2"-300C-FV
24	2-V-Z099-14084R	A217 WC9 NT, CERTIFY	Z099	WC9	92 203 355	0.86	45	34	50	30	26	12	4.1	7	78	28	16	2"-300C-FV
# 25	2-V-U633-14084R	A351 CF8 SH, CERTIFY	U633	CF8	92 203 533	0.90	45	34	50	30	26	12	1.9	7	89.5	30	16	3"-150C-FV
# 26	2-V-U638-14084R		U638		92 203 534	0.75		32			24	10	6.6		64	28	12	2"-150C-FV
# 27	2-V-U639-14084R		U639		92 203 535	0.86		34			26	12	4.1		78	28	16	2"-300C-FV
# 28	2-V-U934-14084R		U934		92 203 691	3.65	85	38	65	48	38	26	10.5	6	132	75	25	6"-150C-FV
# 29	2-V-U935-14084R		U935		92 203 696	2.00	66	38	55	38	32	18	6	6	102.5	60	20	4"-150C-FV
30	2-V-Z113-14084R	SA995 CD3MN REF. NOTE, CERTIFY	Z113	CD3MN	92 203 613	2.00	66	38	55	38	32	18	6	6	102.5	60	20	4"-150C-FV

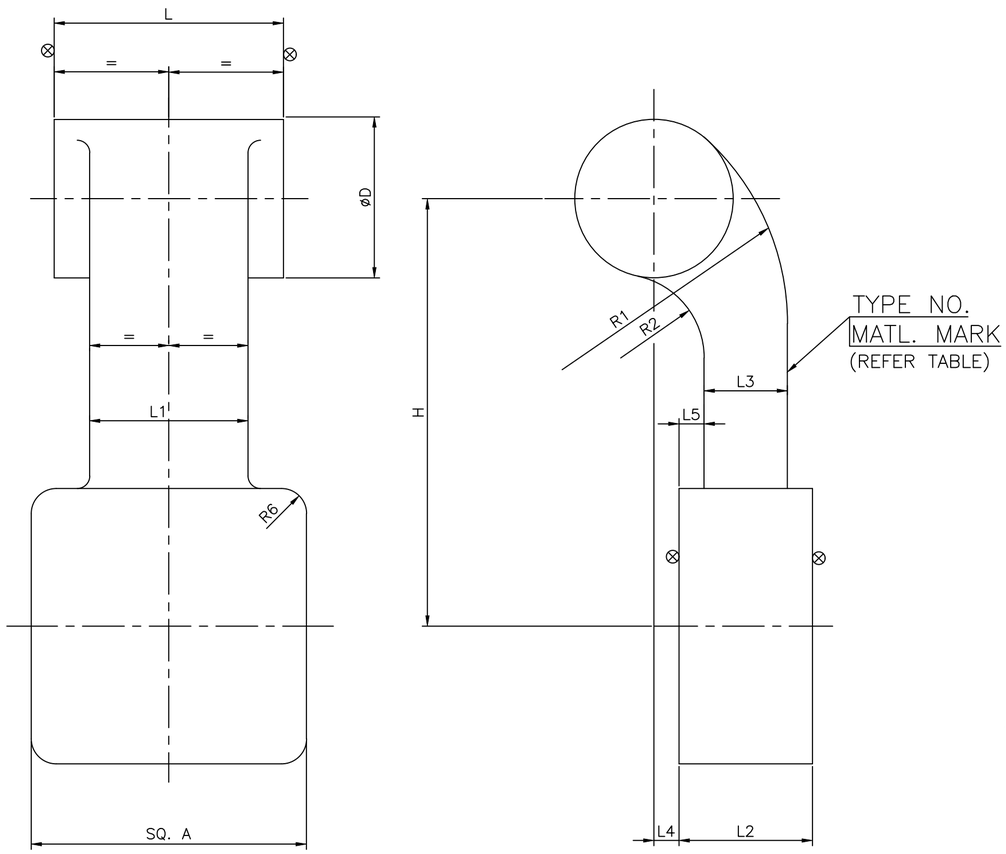

NOTES:-

1. NECESSARY MACHINING ALLOWANCES HAVE BEEN ADDED ON ALL MACHINABLE SURFACES.
2. PERMISIBLE DIMENSIONAL DEVIATIONS OF NON TOLERANCED CASTING DIMENSIONS – REFER LATEST APPLICABLE QUALITY PROCEDURE.
3. CASTING SHALL COMPLY WITH THE REQUIREMENTS OF LATEST APPLICABLE QUALITY PROCEDURE.
4. UNSPECIFIED CASTING RADII 3 – 5 MM.
5. HEIGHT OF CASTING LETTERS 5MM.
6. ⊗ SURFACES TO BE MACHINED FURTHER.
7. # MARKED ITEMS ARE IGC TEST SHALL BE CONDUCTED
8. HEAT TREATMENT FOR SA995 CD3MN AS PER ASME STANDARD SA-995 TABLE 1
   (HEAT TO 2050°F [1120°C] MINIMUM FOR SUFFICIENT TIME TO HEAT CASTING UNIFORMLY TO TEMPERATURE AND WATER QUENCH, OR THE CASTING MAY BE FURNACE COOLED TO 1850°F [1010°C] MINIMUM, HOLD FOR 15 MIN MINIMUM AND THEN WATER QUENCH. A RAPID COOL BY OTHER MEANS MAY BE EMPLOYED IN LIEU OF WATER QUENCH.)

REV	DATE	ALTERED	
04	07.04.18	R.P.SINGH	CHD & APPD SSK & KRS
	SL.No. 25, 26, & 27 INCLUDED		
03	04.02.15	A.MARIMUTHU	CHD & APPD MS & SSK
	SL.No. 24 INCLUDED		
02	30.05.08	T.R.RAMAMURTHY	CHD & APPD PBN & MRK
	SL.No.23 INCLUDED		
05	05.09.18	R.P.SINGH	CHD & APPD SSK & KRS
	SL.No. 28 TO 30 INCLUDED NOTES No. 8 INCLUDED		

ZONE

CAUTION: The information on this document is the property of BHARAT HEAVY ELECTRICALS LTD. It must not be used directly or indirectly in any way detrimental to the interest of the company.

No OF	DESCRIPTION	MATL CODE	MATL SPECN	HEAT TREATMENT	SCRAP SORT	NET WT (kg)	GROSS WT (kg)	DRAWING No	ITEM No
–	–	–	–	–	–	–	–	–	–

TYPE OF PRODUCT OR NAME OF CUSTOMER/PROJECT: CS

DRG.REDRAWN WITH REV.02 ON 30.05.2008

BHARAT HEAVY ELECTRICALS LTD.,
UNIT: HIGH PRESSURE BOILER PLANT.
TIRUCHIRAPALLI -620014.
365-120

	NAME	SIGN	DATE	NO.OF VAR.
DRN	T.R.RAMAMURTHY		30.05.08	–
CHD	T.R.RAMAMURTHY		30.05.08	
APPD	P.BOOMINATHAN		30.05.08	

DEPT VL
CODE 320
SCALE NTS.
WEIGHT (KG). –
REFERENCE INFORMATIONS CAD:C214084R
NO. OF ITEMS –

TITLE: ARM (CASTING)
CARD CODE U 01
DRAWING NO. 2-V-0000-14084R
REV 05

Size A2

CORPORATE DRG ID:TP-DG-2-V-0000-14084R/05

DRAWING NO. 2-V-0000-14151R

ALL DIMENSIONS ARE IN MILLIMETRES. FOR TOLERANCES OF UNTOLERANCED DIMENSIONS DURING MANUFACTURE REFER RELEVANT QCP / QP

SECTION-BB

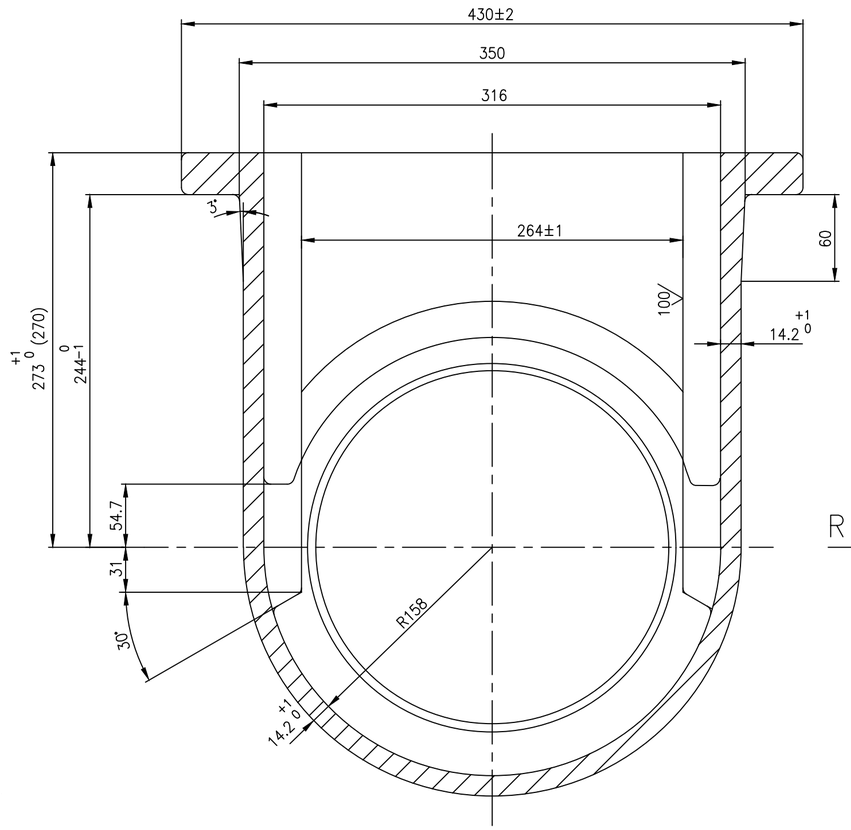

SECTION-CC

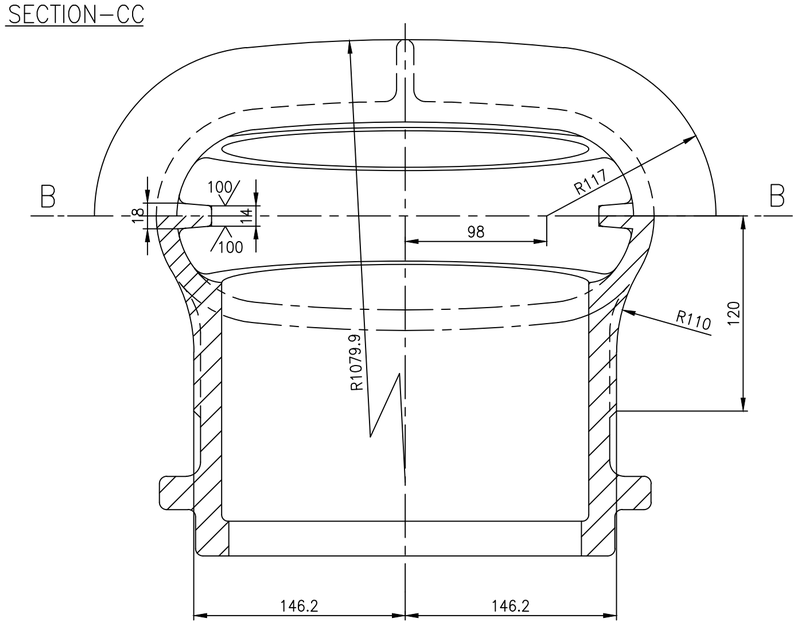

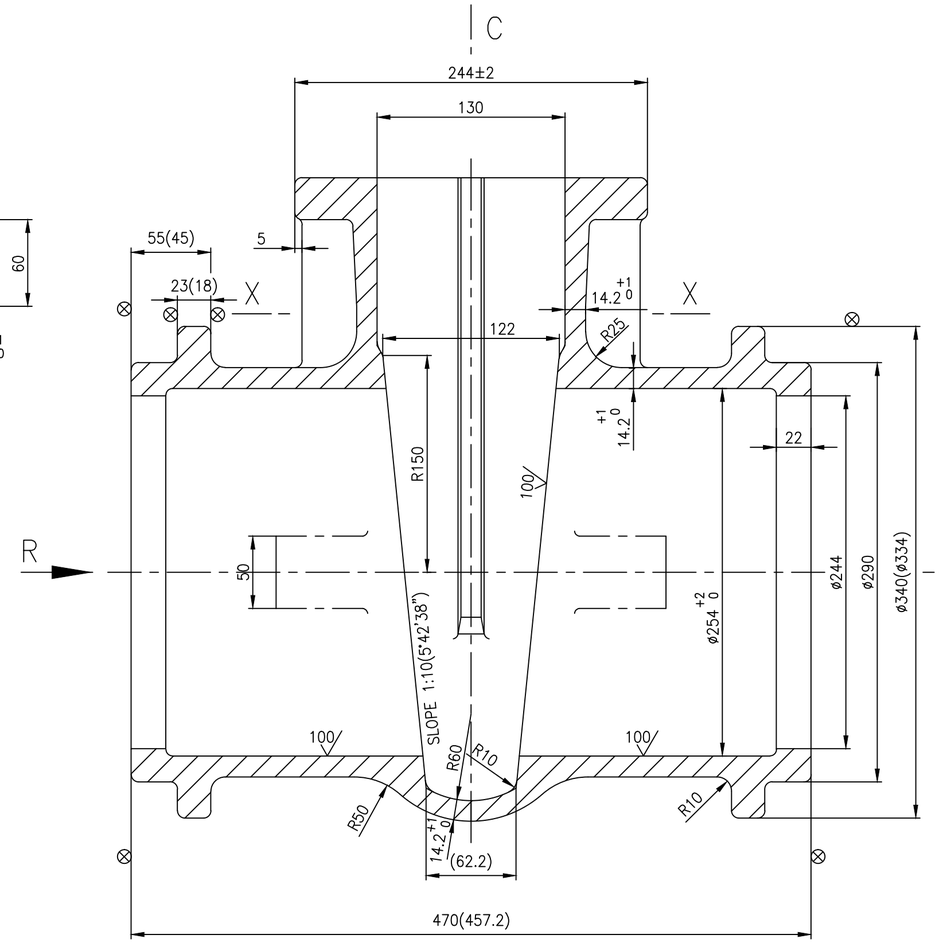

SECTION-XX

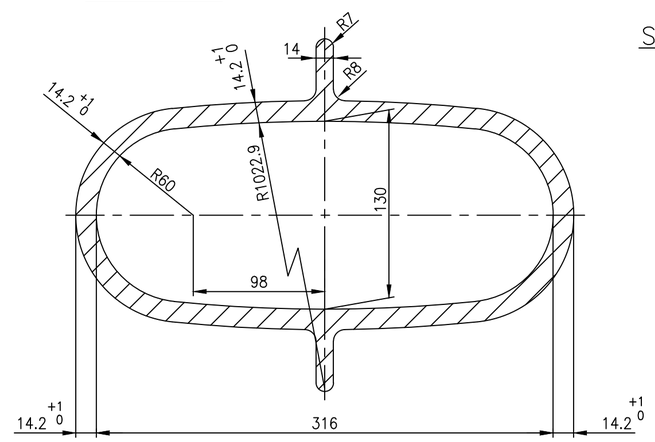

MARKING DETAILS ON CASTING

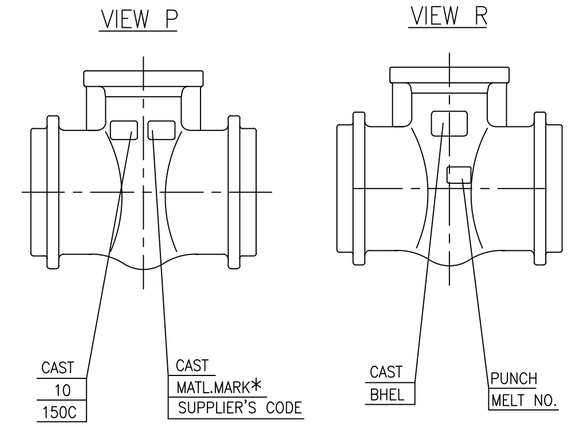

NOTES:

1. NECESSARY ALLOWANCES HAVE BEEN ADDED ON ALL MACHINABLE SURFACES.
2. PERMISSIBLE DIMENSIONAL DEVIATIONS OF CASTING SURFACES REFER LATEST APPLICABLE QUALITY WORK INSTRUCTION
3. FINISH MACHINED DIMENSIONS ARE INDICATED WITHIN BRACKETS FOR INFORMATION.
4. 100 CASTING SURFACES MUST BE OF HIGH QUALITY WITHOUT SURFACE UNEVENNESS.
5. UNSPECIFIED CASTING RADIOUS 3mm.
6. ⊗ SURFACE TO BE MACHINED.
7. HEIGHT OF CASTING LETTERS 30mm.
8. CASTING SHALL GENERALLY COMPLY WITH THE REQUIREMENTS OF LATEST APPLICABLE QUALITY WORK INSTRUCTION IN ALL RESPECTS.
9. PUNCHING DETAILS SHALL BE MARKED ONLY ON RAISED FLAT SURFACE GIVEN AT ZONE B8
10. RISER REMAINS ARE TO COMPLETELY REMOVED SUITABLY.
11. HEAT TREATMENT FOR ASME 995 CD3MN AS PER ASME STANDARD ASME-995 TABLE 1 (HEAT TO 2050°F [1120°C] MINIMUM FOR SUFFICIENT TIME TO HEAT CASTING UNIFORMLY TO TEMPERATURE AND WATER QUENCH, OR THE CASTING MAY BE FURNACE COOLED TO 1850°F [1010°C] MINIMUM, HOLD FOR 15 MIN MINIMUM AND THEN WATER QUENCH. A RAPID COOL BY OTHER MEANS MAY BE EMPLOYED IN LIEU OF WATER QUENCH.)

SPECIAL NOTES:-

1. GUIDE RIB DIMENSIONS TO BE MAINTAINED WITHIN THE TOLERANCES INDICATED
2. BOTH CUIDE RIBS TO BE COPLANER AND TRUELY VERTICAL.

MATL.MARK*	SL NO.	DESCRIPTION	MATL CODE	MATL SPECN	HEAT TREATMENT	SCRAP SORT	NET WT (kg)	GROSS WT (kg)	DRAWING No	ITEM No
CF3M	05	CASTING	92 203 878	SA351 CF3M ATTEST	SH	–	93	--	2.V.NP83.14151R	001
CD3MN	04	CASTING	92 203 637	SA995 GR.CD3MN ATTEST	REFER NOTE	–	93	--	2.V.NP55.14151R	001
CF8	03	CASTING	92 203 383	SA 351 CF8 ATTEST	SH	–	93	--	2.V.ND96.14151R	001
CF8M	02	CASTING	92 203 128	SA351 CF8M ATTEST	SH	–	93	--	2.V.ND12.14151R	001
WCB	01	CASTING	92 201 685	SA216 WCB ATTEST	NR	–	93	--	2.V.NC26.14151R	001

REV	DATE	ALTERED		REV	DATE	ALTERED		REV	DATE	ALTERED		REV	DATE	ALTERED	
04	05.08.19	R.P.SINGH	CHD & APPD SSK & KRS	03	05.03.19	R.P.SINGH	CHD & APPD SSK & KRS	02	26.05.15	SELVAM	CHD & APPD MS&SSK	01	27.05.13	M.S	CHD & APPD SSK&KRS
	SL.No.05 INCLUDED				SL.No.04 INCLUDED NOTE No.11 INCLUDED			ZONE	SL.No. 03 INCLUDED			ZONE	SL.No. 02 INCLUDED		

CAUTION: The information on this document is the property of BHARAT HEAVY ELECTRICALS LTD. It must not be used directly or indirectly in any way detrimental to the interest of the company.

TYPE OF PRODUCT
OR NAME OF
CUSTOMER/PROJECT

BHARAT HEAVY ELECTRICALS LTD.,
UNIT: HIGH PRESSURE BOILER PLANT.
TIRUCHIRAPALLI -620014.
365-120

	NAME	SIGN	DATE	NO.OF VAR.
DRN	A.S.PANDY		22.08.07	
CHD	T.R.RAMAMURTHY		22.08.07	
APPD	P.BOOMINATHAN		22.08.07	

DEPT VL
CODE 320
SCALE N T S
WEIGHT (KG). 93
REFERENCE INFORMATIONS: CAD REF.C214151R
NO. OF ITEMS

TITLE: BODY (10"/C150 BW GV)
CARD CODE U 01
DRAWING NO. 2-V-0000-14151R
REV 04

Size A2

DRAWING NO. 2-V-0000-14154R

ALL DIMENSIONS ARE IN MILLIMETRES. FOR TOLERANCES OF UNTOLERANCED DIMENSIONS DURING MANUFACTURE REFER RELEVANT QCP / QP

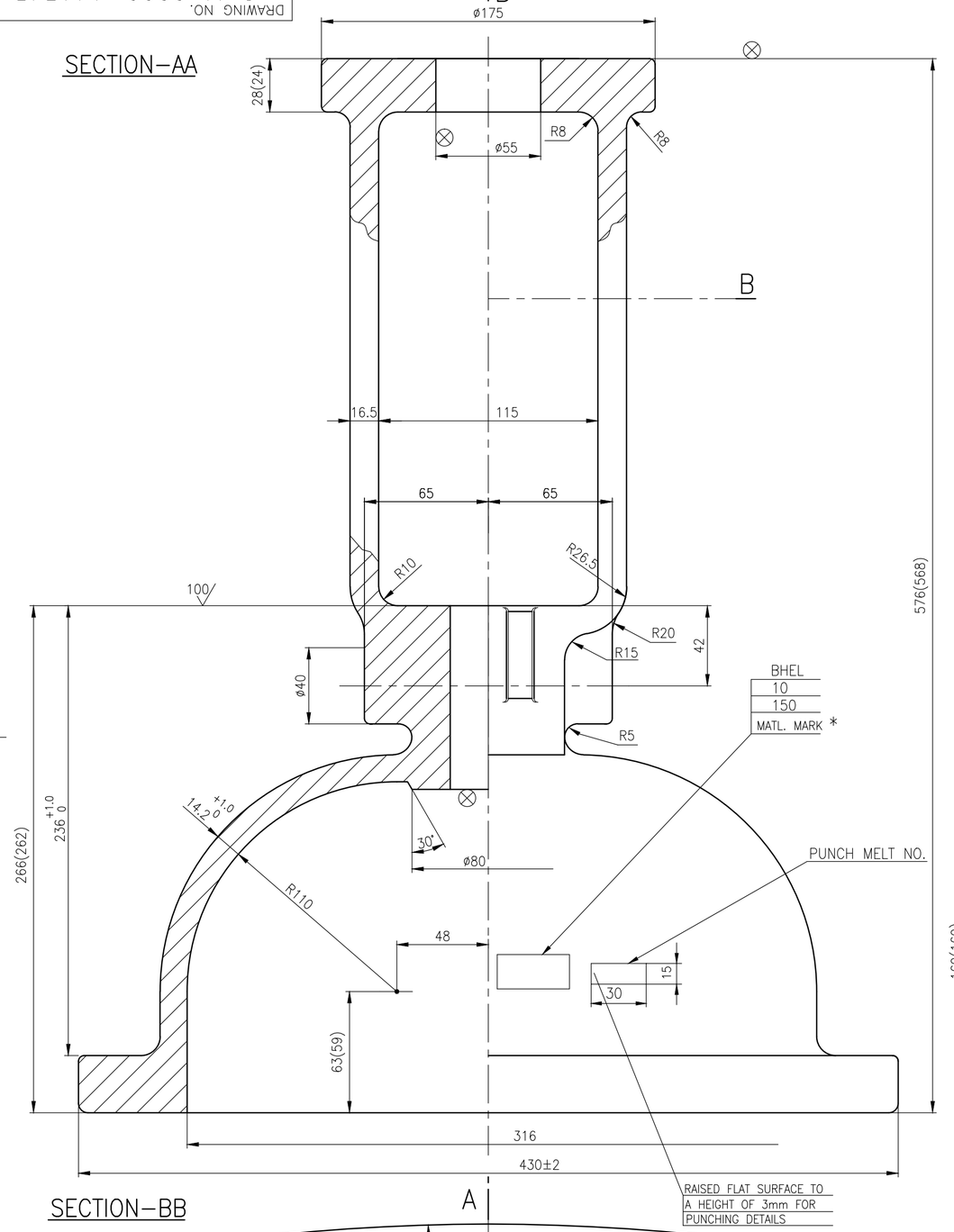

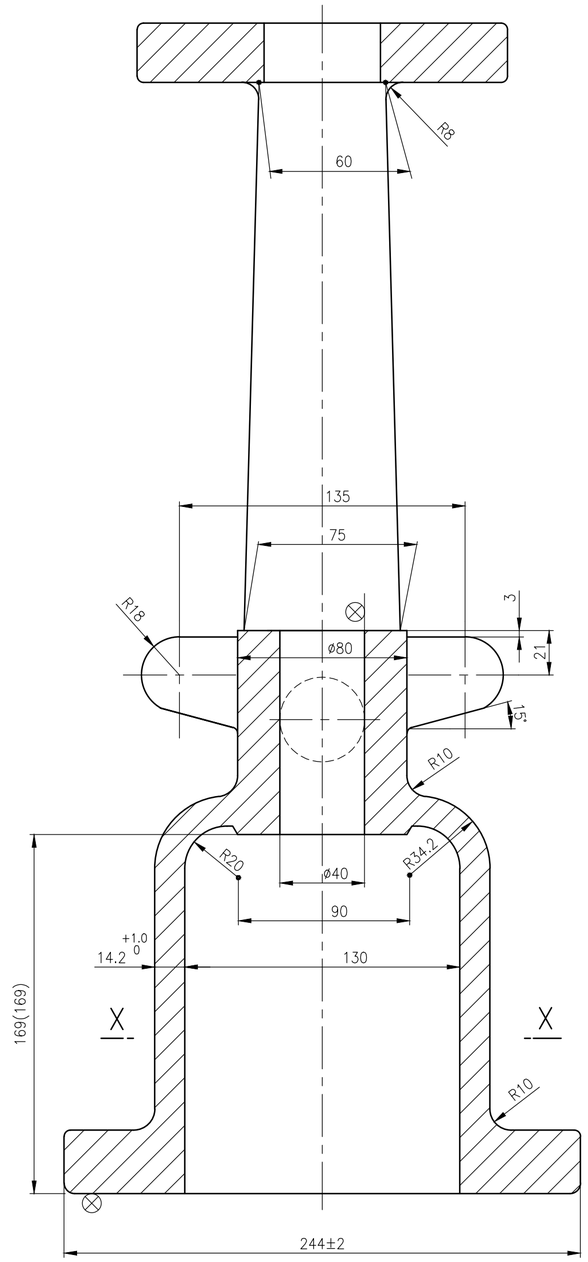

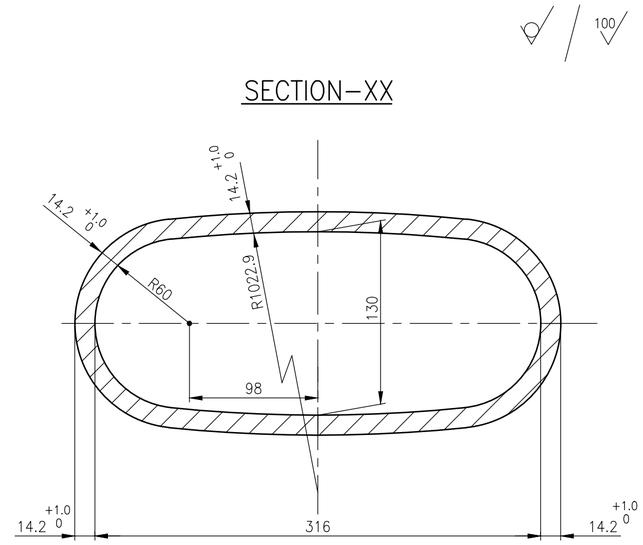

NOTES:

1. NECESSARY ALLOWANCES HAVE BEEN ADDED ON ALL MACHINABLE SURFACES.
2. FOR PERMISSIBLE DIMENSIONAL DEVIATIONS OF NON TOLERANCED LATEST DIMENSIONS REFER LATEST APPLICABLE QUALITY WORK INSTRUCTIONS
3. FINISH MACHINED DIMENSIONS ARE INDICATED WITHIN BRACKETS FOR INFORMATION ONLY.
4. 100 INDICATES THE CASTINGSURFACES MUST BE OF HIGH QUALITY WITHOUT SURFACE UNEVENNESS.
5. UNSPECIFIED CASTING RADIOUS R3 MAX..
6. ⊗ THIS MARK INDICATES THE SURFACES TO BE MACHINED.
7. HEIGHT OF CASTING LETTERS 20mm.
8. CASTING SHALL COMPLY WITH THE REQUIREMENTS OF LATEST APPLICABLE QUALITY WORK INSTRUCTIONS PROCEDURE IN ALL RESPECTS.

* 9. CAST MATL. MARK "WCB" FOR A216 WCB AND "CF8M" FOR A351 CF8M MATL. "CF8" FOR A351 CF8 MATL.

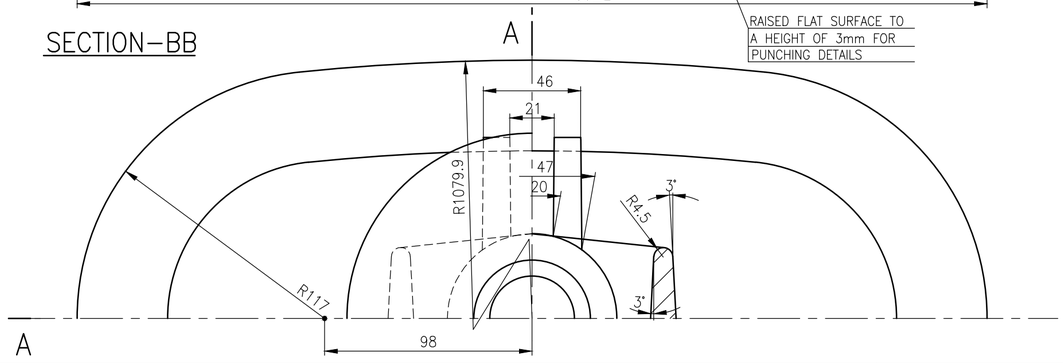

SL. No.	DESCRIPTION	MATL CODE	MATL SPECN	HEAT TREATMENT	SCRAP SORT	NET WT (kg)	GROSS WT (kg)	DRAWING No / COMPONENT CODE	ITEM No
03	CASTING	–	A351 CF8 CERTIFY	SH	46	44	–	2.V.ND79.14154R / 92 203 343 0000	006
02	CASTING	–	A351 CF8M CERTIFY	SH	46	44	–	2.V.ND61.14154R / 92 203 312 0000	006
01	CASTING	–	A216 WCB CERTIFY	NORMALAISED	10	44	–	2.V.NC76.14154R / 92 201 688 0000	006

REV	DATE	ALTERED	
03	20.12.14		A.MARIMUTHU
		CHD & APPD	MS & SSK
ZONE	SL. No 03 INCLUDED		

CAUTION: The information on this document is the property of BHARAT HEAVY ELECTRICALS LTD. It must not be used directly or indirectly in any way detrimental to the interest of the company.

TYPE OF PRODUCT
OR NAME OF
CUSTOMER/PROJECT

BHARAT HEAVY ELECTRICALS LTD.,
UNIT: HIGH PRESSURE BOILER PLANT.
TIRUCHIRAPALLI -620014.
365-120

	NAME	SIGN	DATE	NO.OF VAR.
DRN	A.S.PANDY		28.09.07	
CHD	T.R.R.MURTHY		28.09.07	
APPD	P.BOOMINATHAN		28.09.07	

DEPT	SCALE	WEIGHT (KG).	REFERENCE INFORMATIONS	NO. OF ITEMS
VL	NTS	44	CAD REF.C214154R	
CODE 320				

TITLE	CARD CODE	DRAWING NO.	REV
YOKE CUM BONNET (10"–C150–GV–MO)	U 01	2–V–0000–14154R	03

Size A2

DRAWING NO. 2-V-0000-14166R

ALL DIMENSIONS ARE IN MILLIMETRES. FOR TOLERANCES OF UNTOLERANCED DIMENSIONS DURING MANUFACTURE REFER RELEVANT QCP / QP

SECTION – AA

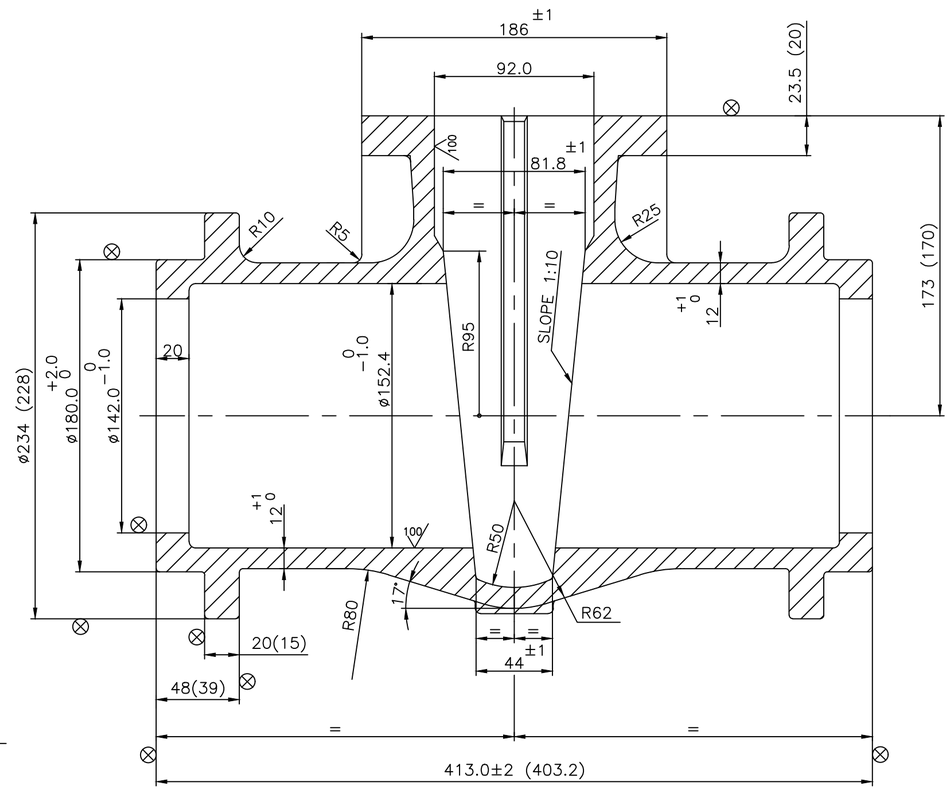

SECTION – BB

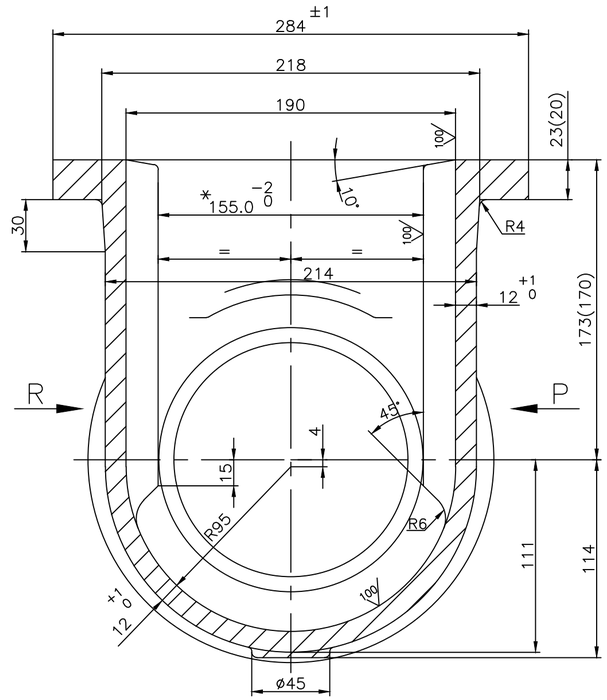

VIEW – P

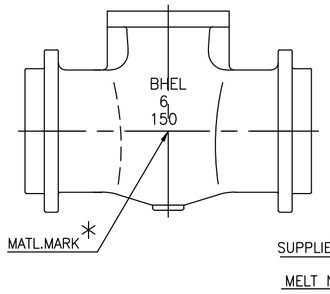

VIEW – Q

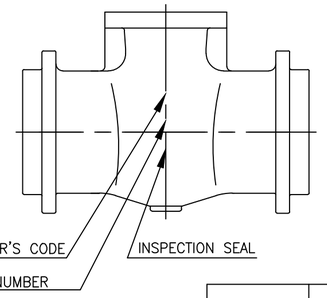

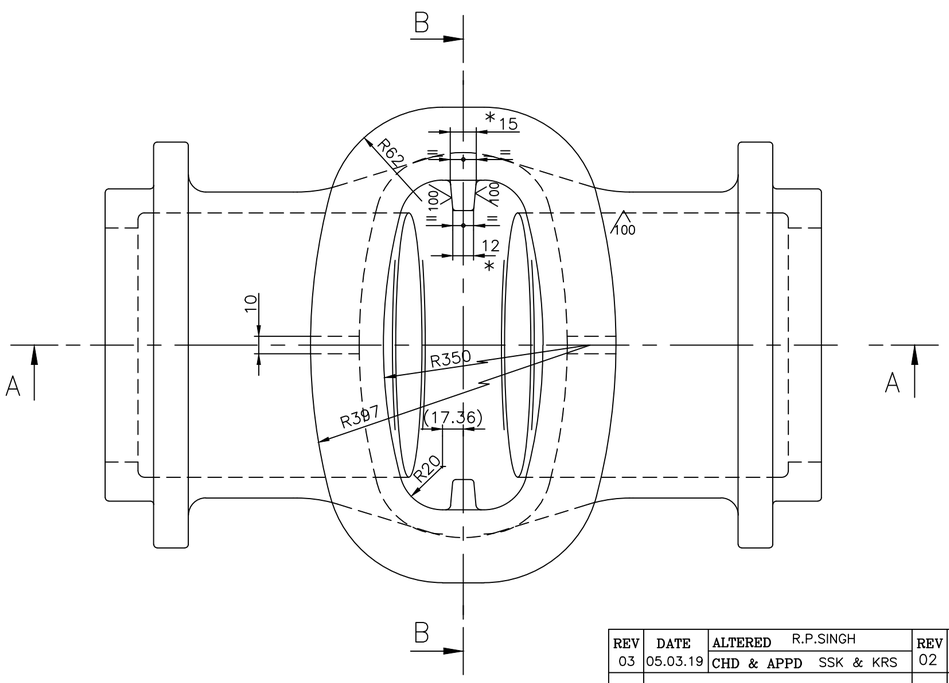

NOTE

01. NECESSARY MACHINING ALLOWANCES HAVE BEEN ADDED ON ALL MACHINABLE SURFACES.
02. 100 INDICATED CASTING SURFACES SHALL BE OF HIGH QUALITY WITHOUT SURFACE UNEVENNESS.
03. FINISH MACHINED DIMENSIONS ARE INDICATED WITHIN BRACKETS FOR INFORMATION ONLY.
04. LETTERS– BHEL,SIZE,MATL.& SUPPLIERS CODE ARE TO BE CAST IN THE INDICATED ZONE.
05. CASTING SHALL COMPLY WITH THE REQUIREMENTS OF APPLICABLE SPECIFICATION.
06. UNSPECIFIED CASTING RADII = R2 TO R3
07. HEIGHT OF CASTING LETTERS = 12 mm
08. ⊗ INDICATES SURFACE TO BE MACHINED.
09. HEAT TREATMENT FOR ASME 995 CD3MN AS PER ASME STANDARD ASME–995 TABLE 1
(HEAT TO 2050°F [1120°C] MINIMUM FOR SUFFICIENT TIME TO HEAT CASTING UNIFORMLY TO TEMPERATURE AND WATER QUENCH, OR THE CASTING MAY BE FURNACE COOLED TO 1850°F [1010°C] MINIMUM, HOLD FOR 15 MIN MINIMUM AND THEN WATER QUENCH. A RAPID COOL BY OTHER MEANS MAY BE EMPLOYED IN LIEU OF WATER QUENCH.)

* SPECIAL NOTE

01. GUIDE BAR DIMENSIONS TO BE MAINTAINED WITHIN THE TOLERENCE INDICATED.
02. BOTH GUIDE RIBS TO BE COPLANAR AND TRUELY VERTICAL.

MATL.MARK *	SL No.	DESCRIPTION	MATL CODE	MATL SPECN	HEAT TREATMENT	SCRAP SORT	NET WT (kg)	GROSS WT (kg)	DRAWING No / COMPONENT CODE	ITEM No
CF3M	05	CASTING	–	SA 351 CF3M ATTEST	SH	–	38.0	–	2.V.NP81.14166R / 922038790000	001
CD3MN	04	CASTING	–	SA995 GR.CD3MN ATTEST	REFER NOTE	–	38.0	–	2.V.NP53.14166R / 922035830000	001
CF8	03	CASTING	–	SA 351 CF8 ATTEST	SH	–	38.0	–	2.V.ND72.14166R / 922033380000	001
CF8M	02	CASTING	–	SA 351 CF8M ATTEST	SH	–	38.0	–	2.V.ND10.14166R / 922031600000	001
WCB	01	CASTING	–	SA216 WCB ATTEST	NR	–	38.0	–	2.V.NC24.14166R / 922016950000	001

REV	DATE	ALTERED	
04	03.08.19	R.P.SINGH	CHD & APPD SSK & KRS
		SL.No.05 INCLUDED	

REV	DATE	ALTERED	
03	05.03.19	R.P.SINGH	CHD & APPD SSK & KRS
		SL.No.04 INCLUDED NOTE No.09 INCLUDED	

REV	DATE	ALTERED	
02	27.2.14	A.MARIMUTHU	CHD & APPD MS & SSK
		SL.No.03 INCLUDED.	

REV	DATE	ALTERED	
01	20.06.13	M.S	CHD & APPD SSK & KRS
ZONE		SL.NO. 02 INCLUDED	

CAUTION: The information on this document is the property of BHARAT HEAVY ELECTRICALS LTD. It must not be used directly or indirectly in any way detrimental to the interest of the company.

TYPE OF PRODUCT
OR NAME OF
CUSTOMER/PROJECT

BHARAT HEAVY ELECTRICALS LTD.,
UNIT: HIGH PRESSURE BOILER PLANT.
TIRUCHIRAPALLI -620014.
365–120

	NAME	SIGN	DATE	NO.OF VAR.
DRN	M.SRINIVASAN		28.08.07	
CHD	P.BOOMINATHAN		28.08.07	
APPD	M.RAJAKUAMR		28.08.07	

DEPT	SCALE	WEIGHT (KG).	REFERENCE INFORMATIONS	NO. OF ITEMS
VL	NTS	38.0	CAD :C214166R	

CODE	TITLE	CARD CODE	DRAWING NO.	REV
320	BODY (6" – C150 – BW)	U 01	2–V–0000–14166R	04

Size A2

DRAWING NO. 2-V-0000-14171R

ALL DIMENSIONS ARE IN MILLIMETRES. FOR TOLERANCES OF UNTOLERANCED DIMENSIONS DURING MANUFACTURE REFER RELEVANT QCP / QP

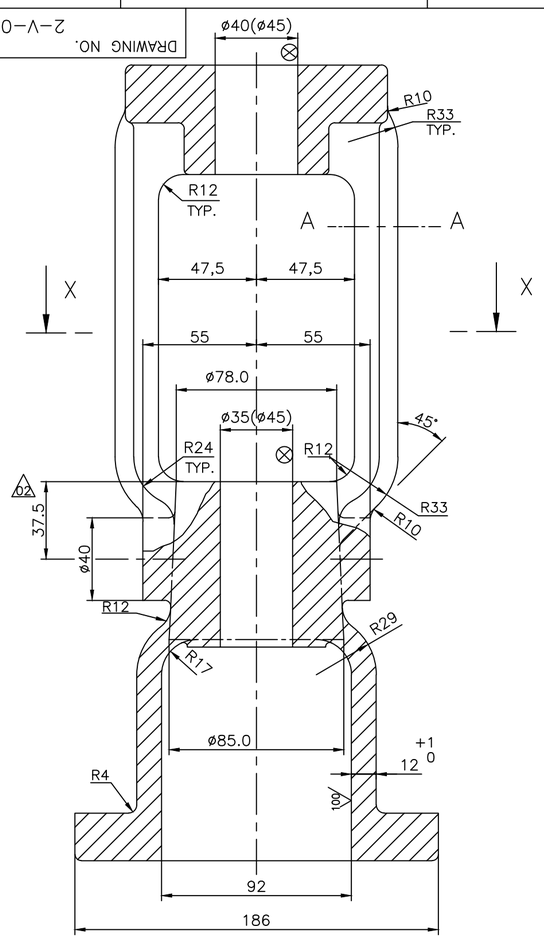

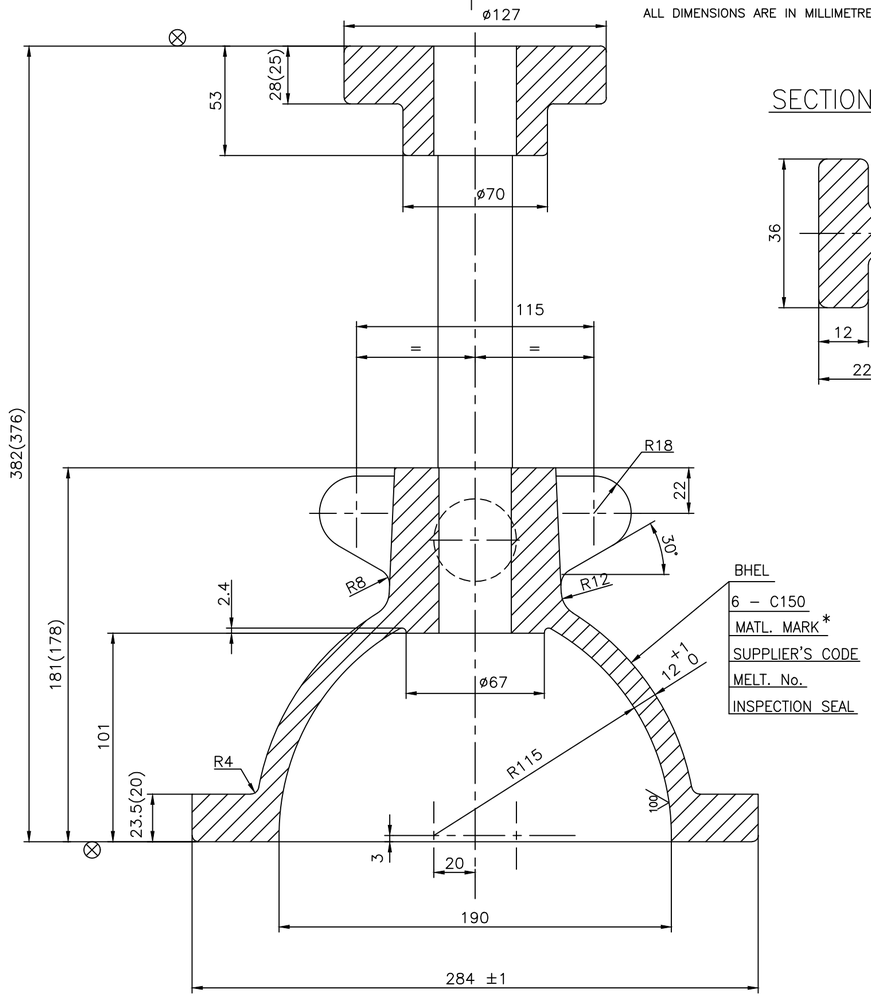

SECTION AA

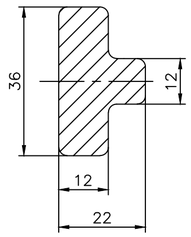

100

NOTES–

01. NECESSARY MACHINING ALLOWANCES HAVE BEEN ADDED ON ALL MACHINABLE SURFACES.
02. PERMISSIBLE DEVIATIONS OF NON TOLERANCED CASTING DIMENSIONS REFER APPLICABLE TDC
03. FINISH MACHINED DIMENSIONS ARE INDICATED WITHIN BRACKETS FOR INFORMATION ONLY.
04. LETTERS– BHEL,SIZE,MATL.& SUPPLIERS CODE ARE TO BE CAST IN THE INDICATED ZONE.
05. CASTING SHALL COMPLY WITH THE REQUIREMENTS OF APPLICABLE TDC
06. UNSPECIFIED CASTING RADII = R3 TO R5
07. HEIGHT OF CASTING LETTERS = 15 mm
08. ⊗ INDICATES SURFACE TO BE MACHINED.
09. 100 INDICATED CASTING SURFACES SHALL BE OF HIGH QUALITY WITHOUT SURFACE UNEVENNESS.
10. HEAT TREATMENT FOR ASTM 995 CD3MN AS PER ASTM STANDARD ASTM–995 TABLE 1 (HEAT TO 2050°F [1120°C] MINIMUM FOR SUFFICIENT TIME TO HEAT CASTING UNIFORMLY TO TEMPERATURE AND WATER QUENCH, OR THE CASTING MAY BE FURNACE COOLED TO 1850°F [1010°C] MINIMUM, HOLD FOR 15 MIN MINIMUM AND THEN WATER QUENCH. A RAPID COOL BY OTHER MEANS MAY BE EMPLOYED IN LIEU OF WATER QUENCH.)
11. # MARKED ITEMS IGC TEST SHALL BE CONDUCTED

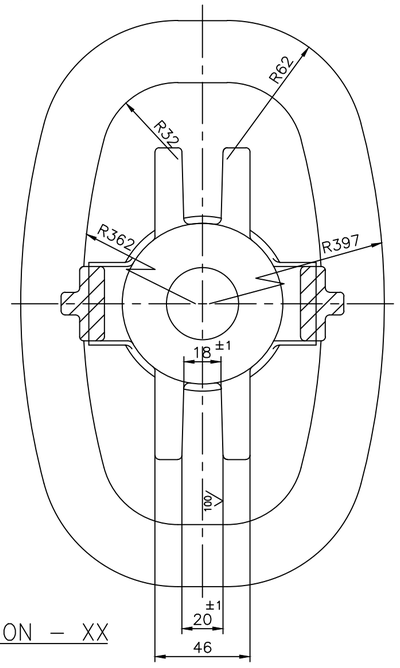

SECTION – XX

MATL. MARK *	SL No.	DESCRIPTION	MATL CODE	MATL SPECN	HEAT TREATMENT	SCRAP SORT	NET WT (kg)	GROSS WT (kg)	DRAWING No / COMPONENT CODE	ITEM No
CF3M	06	CASTING	–	A351 CF3M CERTIFY	SH	–	17.3	–	2.V.NP76.14171R / 92 203 850 0000	007
CF8	#05	CASTING	–	A351 CF8 CERTIFY	SH	–	17.3	–	2.V.U937.14171R / 92 203 750 0000	007
CD3MN	04	CASTING	–	A995 Gr.CD3MN CERTIFY	REFER NOTE	–	17.3	–	2.V.NP33.14171R/1 / 92 203 484 0000	007
CF8	03	CASTING	–	A351 CF8 CERTIFY	SH	–	17.3	–	2.V.ND72.14171R / 92 203 341 0000	007
CF8M	02	CASTING	–	A351 CF8M CERTIFY	SH	–	17.3	–	2.V.ND10.14171R/1 / 92 203 161 0000	007
WCB	01	CASTING	–	A216 WCB CERTIFY	NORMALISED	–	17.3	–	2.V.NC64.14171R/1 / 92 201 700 0000	007

REV	DATE	ALTERED	
07	30.05.19	R.P.SINGH	CHD & APPD SSK & KRS
	SL. No. 06 INCLUDED		
06	12.12.18	R.P.SINGH	CHD & APPD SSK & KRS
	SL. No. 05 INCLUDED NOTES No. 11 INLCUDED		
05	25.01.18	R.P.SINGH	CHD & APPD SSK & KRS
	FOR SL.NO.04 MATERIAL SPECIFICATION CHANGED TO CD3MN FROM 6A NOTE SL.NO.10 HEAT TREATMENT PROCESS REVISED		
04	14.06.17	T.SANGEETHA	CHD & APPD SSK & KRS
	SL.No. 04 INCLUDED		
03	27.12.14	MARIMUTHU	CHD & APPD MS & SSK
	SL.No. 03 INCLUDED		
02	21.08.14	MARIMUTHU	CHD & APPD MS & SSK
	DIMENSION 37.5 INCLUDED. DCP: 801794		
01	20.06.13	M.S	CHD & APPD SSK & KRS
	SL.No. 02 INCLUDED		

ZONE

CAUTION: The information on this document is the property of BHARAT HEAVY ELECTRICALS LTD. It must not be used directly or indirectly in any way detrimental to the interest of the company.

TYPE OF PRODUCT
OR NAME OF
CUSTOMER/PROJECT

BHARAT HEAVY ELECTRICALS LTD.,
UNIT: HIGH PRESSURE BOILER PLANT.
TIRUCHIRAPALLI -620014.
365–120

	NAME	SIGN	DATE	NO.OF VAR.
DRN	M.SRINIVASAN		03.09.07	
CHD	P.BOOMINATHAN		03.09.07	
APPD	M.RAJAKUMAR		03.09.07	

DEPT VL
CODE 320
SCALE NTS
WEIGHT (KG). REF. TABLE
REFERENCE INFORMATIONS
CAD:C214171R
NO. OF ITEMS

TITLE
YOKE CUM BONNET
(6–C150)

CARD CODE U 01

DRAWING NO. 2–V–0000–14171R

REV 07

Size A2

DRAWING NO. 2-V-0000-14220R

ALL DIMENSIONS ARE IN MILLIMETRES. FOR TOLERANCES OF UNTOLERANCED DIMENSIONS DURING MANUFACTURE REFER RELEVANT QCP / QP

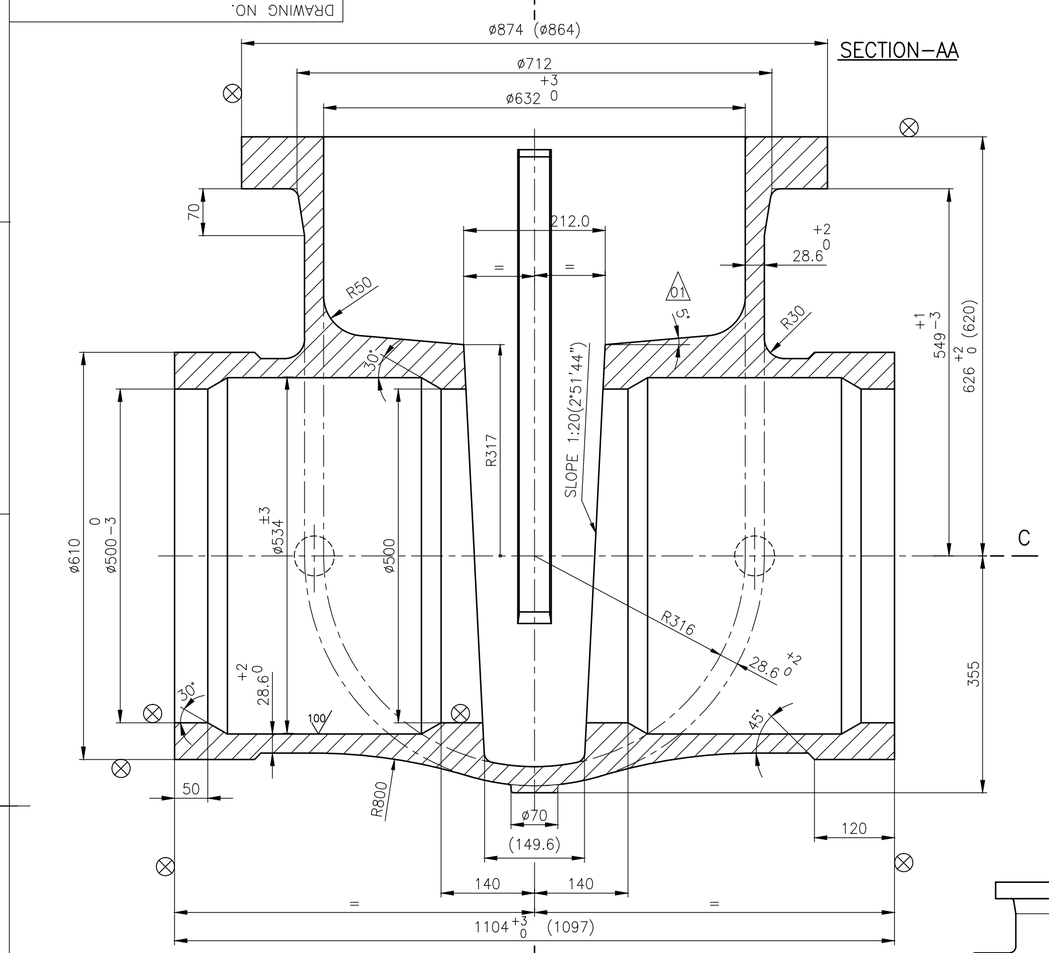

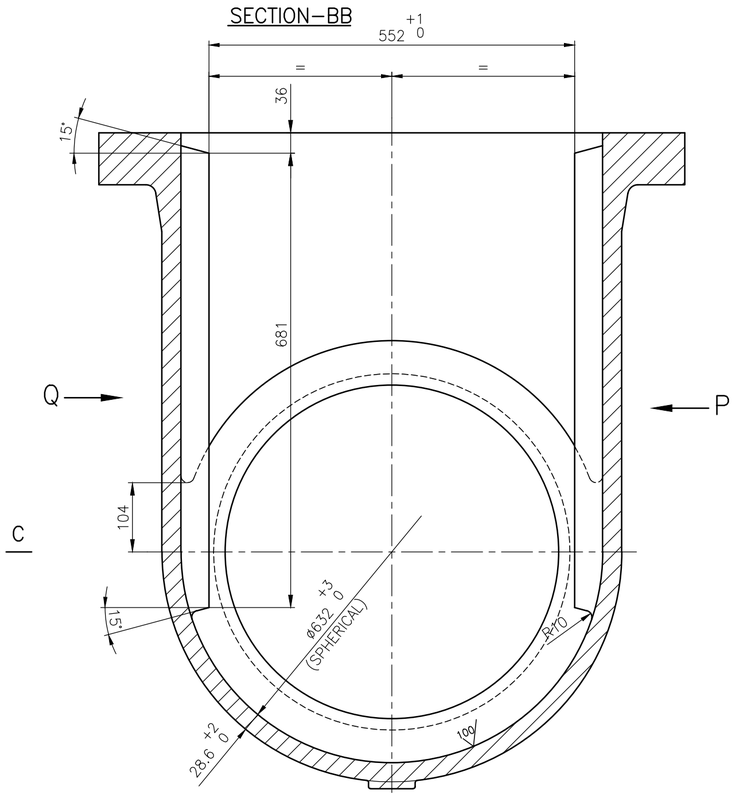

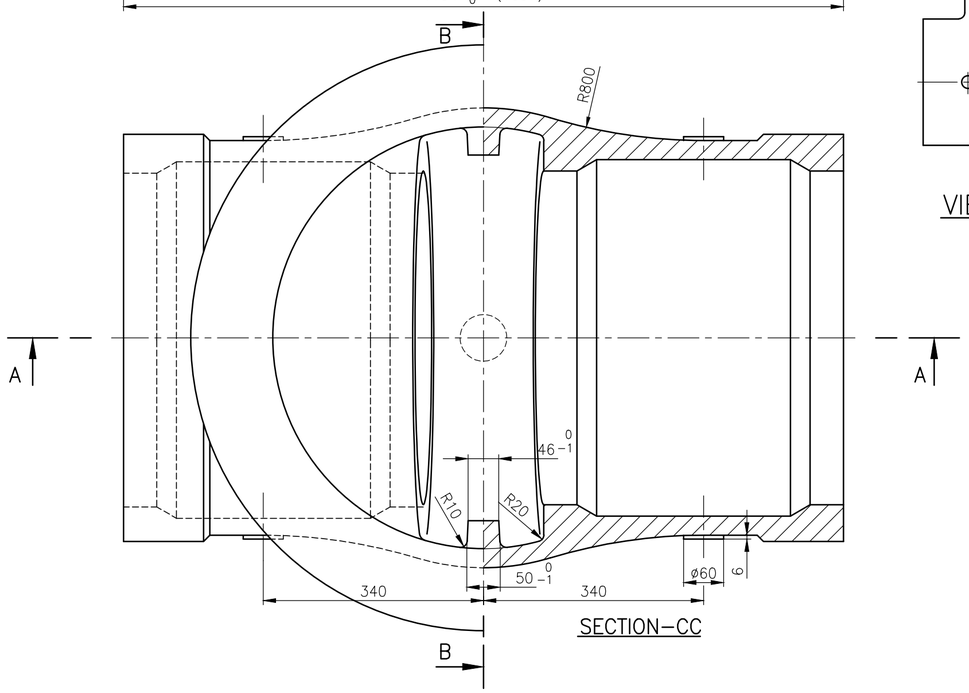

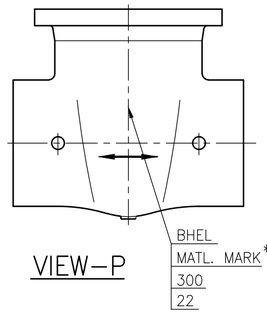

VIEW–P

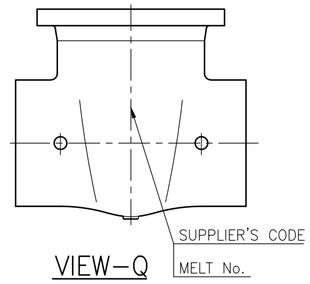

VIEW–Q

NOTE

01. NECESSARY MACHINING ALLOWANCES HAVE BEEN ADDED ON ALL MACHINABLE SURFACES.
02. PERMISSIBLE DEVIATIONS OF NON TOLERANCED CASTING DIMENSIONS REFER APPLICABLE TDC
03. FINISH MACHINED DIMENSIONS ARE INDICATED WITHIN BRACKETS FOR INFORMATION ONLY.
04. THE EMBOSSING OF BHEL, MATL. MARK, RATING & SIZE SHALL BE DONE STRICTLY AS PER THE SEQUENCE SHOWN IN VIEW–P
05. CASTING SHALL COMPLY WITH THE REQUIREMENTS OF APPLICABLE SPECIFICATION.
06. UNSPECIFIED CASTING RADII = R5
07. HEIGHT OF CASTING LETTERS = 30 mm
08. ⊗ INDICATES SURFACE TO BE MACHINED.
09. 100 INDICATED CASTING SURFACES SHALL BE OF HIGH QUALITY WITHOUT SURFACE UNEVENNESS.

* SPECIAL NOTE

01. GUIDE BAR DIMENSIONS TO BE MAINTAINED WITHIN THE TOLERENCE INDICATED.
02. BOTH GUIDE RIBS TO BE COPLANAR AND TRUELY VERTICAL.

MATL.MARK*	SL. No.	DESCRIPTION	MATL CODE	MATL SPECN	HEAT TREATMENT	SCRAP SORT	NET WT (kg)	GROSS WT (kg)	DRAWING No / COMPONENT CODE	ITEM No
WC9	02	CASTING	92 201 745	ASTM A217 WC9– ATTEST	NORMALISED & TEMPERED	–	795	–	2.V.NE97.14220R/1 / 92 201 745 0000	001
WCB	01	CASTING	92 201 744	ASTM A216 WCB– ATTEST	NORMALISED	–	795	–	2.V.NE96.14220R/1 / 92 201 744 0000	001

REV	DATE	ALTERED	M.SRINIVASAN
01	28.09.12	CHD & APPD	SSK & KRS
ZONE	DIMENSION TAPER 5° INCLUDED. DCP:801396		

CAUTION: The information on this document is the property of BHARAT HEAVY ELECTRICALS LTD. It must not be used directly or indirectly in any way detrimental to the interest of the company.

TYPE OF PRODUCT OR NAME OF CUSTOMER/PROJECT

BHARAT HEAVY ELECTRICALS LTD., UNIT: HIGH PRESSURE BOILER PLANT. TIRUCHIRAPALLI -620014. 365–120

	NAME	SIGN	DATE	NO.OF VAR.
DRN	M.SRINIVASAN		24.03.08	
CHD	P.BOOMINATHAN		24.03.08	
APPD	M.RAJAKUAMR		24.03.08	

DEPT	SCALE	WEIGHT (KG).	REFERENCE INFORMATIONS	NO. OF ITEMS
VL / CODE 320	NTS	REF. TABLE	CAD :C214220R	

TITLE	CARD CODE	DRAWING NO.	REV
BODY (22" – C300 – BW)	U 01	2–V–0000–14220R	01

Size A2

DRAWING NO. 2-V-0000-14233R

ALL DIMENSIONS ARE IN MILLIMETRES. FOR TOLERANCES OF UNTOLERANCED DIMENSIONS DURING MANUFACTURE REFER RELEVANT QCP / QP

SECTION – AA

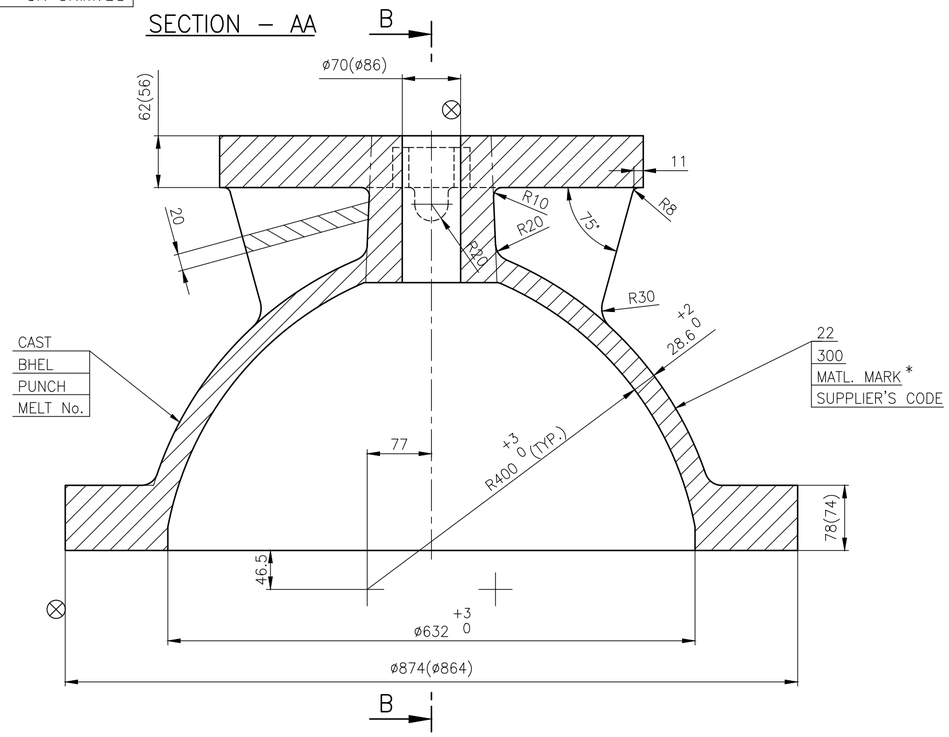

SECTION – BB

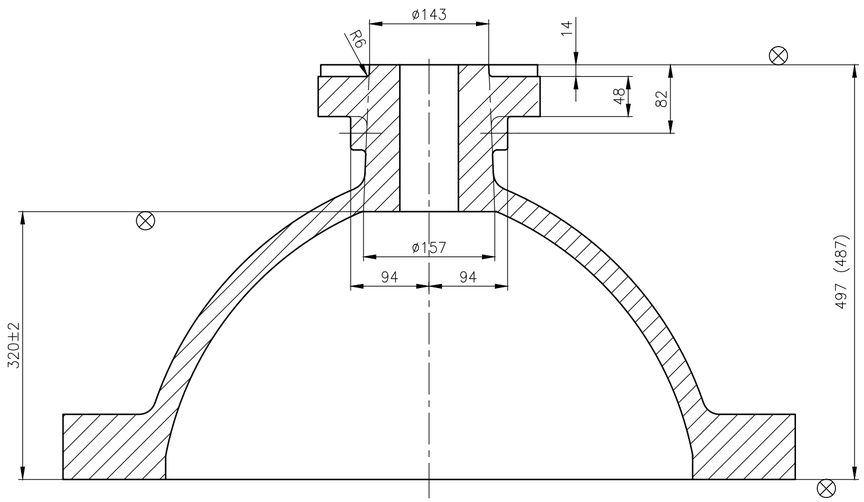

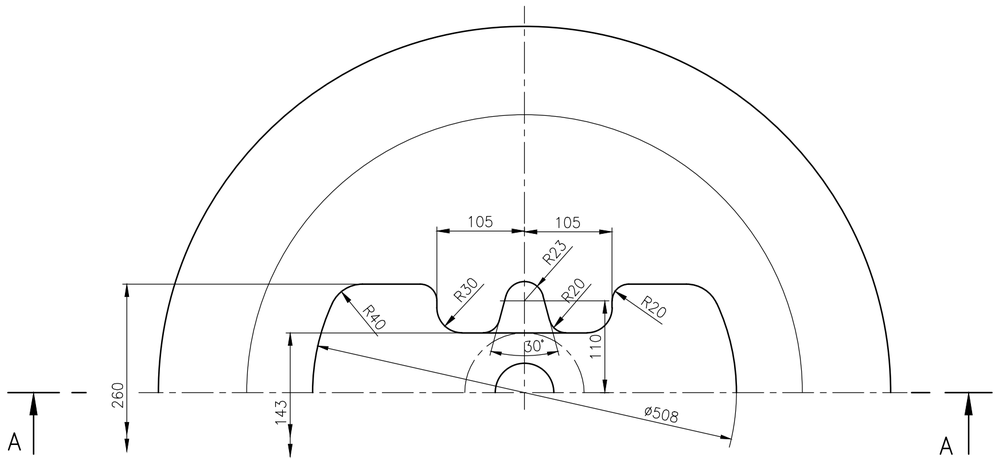

NOTE

01. NECESSARY MACHINING ALLOWANCES HAVE BEEN ADDED ON ALL MACHINABLE SURFACES.

02. FOR PERMISSIBLE DEVIATIONS ON NON TOLERANCED CASTING DIMENSION REFER APPLICABLE QUALITY PROCEDURE.

03. FINISH MACHINED DIMENSIONS ARE INDICATED WITHIN BRACKETS FOR INFORMATION ONLY.

04. LETTERS– SIZE,MATL.& SUPPLIERS CODE ARE TO BE CAST IN THE INDICATED ZONE.

05. CASTING SHALL COMPLY WITH THE REQUIREMENTS OF APPLICABLE QUALITY PROCEDURE.

06. UNSPECIFIED CASTING RADII = R5

07. HEIGHT OF CASTING LETTERS = 25 mm

08. ⊗ INDICATES SURFACE TO BE MACHINED.

MATL.MARK *	SL. No.	DESCRIPTION	MATL CODE	MATL SPECN	HEAT TREATMENT	SCRAP SORT	NET WT (kg)	GROSS WT (kg)	DRAWING No / COMPONENT CODE	ITEM No
WC9	02	CASTING	92 201 752	ASTM A217 WC9– CERTIFY	NORMALISED & TEMPERED	–	330.0	–	2.V.NE97.14233R/01 / 92 201 752 0000	011
WCB	01	CASTING	92 201 751	ASTM A216 WCB– CERTIFY	NORMALISED	–	330.0	–	2.V.NE96.14233R/01 / 92 201 751 0000	011

TYPE OF PRODUCT
OR NAME OF
CUSTOMER/PROJECT

CAUTION: The information on this document is the property of BHARAT HEAVY ELECTRICALS LTD. It must not be used directly or indirectly in any way detrimental to the interest of the company.

BHARAT HEAVY ELECTRICALS LTD.,
UNIT: HIGH PRESSURE BOILER PLANT.
TIRUCHIRAPALLI -620014.
365–120

	NAME	SIGN	DATE	NO.OF VAR.
DRN	M.SRINIVASAN		24.03.08	
CHD	P.BOOMINATHAN		24.03.08	
APPD	M.RAJAKUMAR		24.03.08	

REV	DATE	ALTERED	M.SRINIVASAN
01	28.09.12	CHD & APPD	SSK & KRS

ZONE

DRAWING CONVERTED INTO AUTOCAD.

DCP:801396

DEPT VL
CODE 320
SCALE NTS
WEIGHT (KG). REF TABLE
REFERENCE INFORMATIONS
CAD :C214233R
NO. OF ITEMS

TITLE
BONNET
(22"–C300)

CARD CODE U 01

DRAWING NO. 2–V–0000–14233R

REV 01

Size A2

DRAWING NO. 2-V-0000-14235R

ALL DIMENSIONS ARE IN MILLIMETRES. FOR TOLERANCES OF UNTOLERANCED DIMENSIONS DURING MANUFACTURE REFER RELEVANT QCP / QP

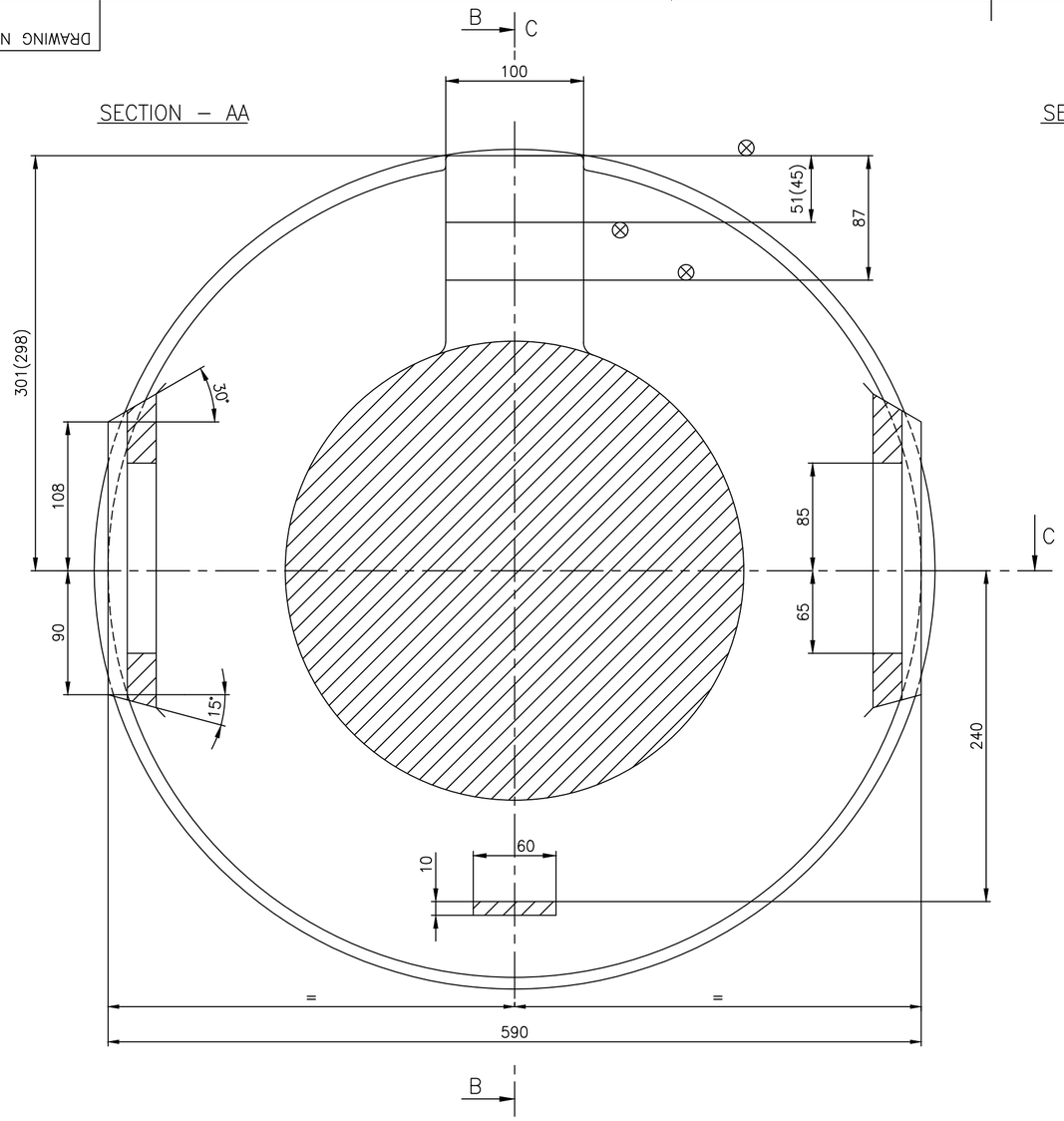

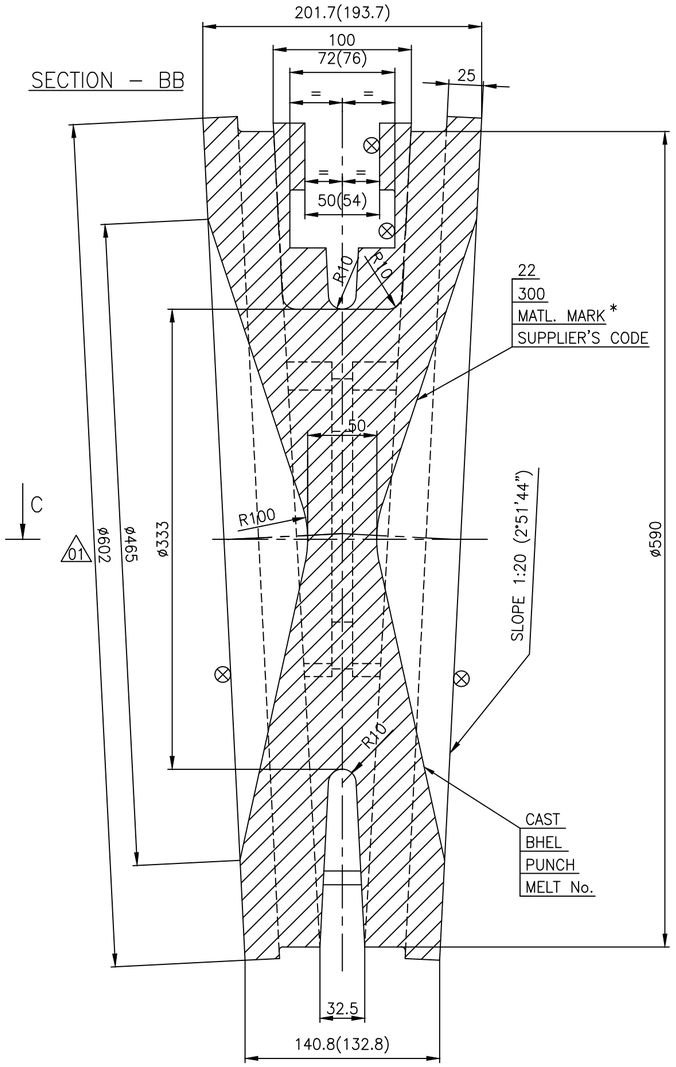

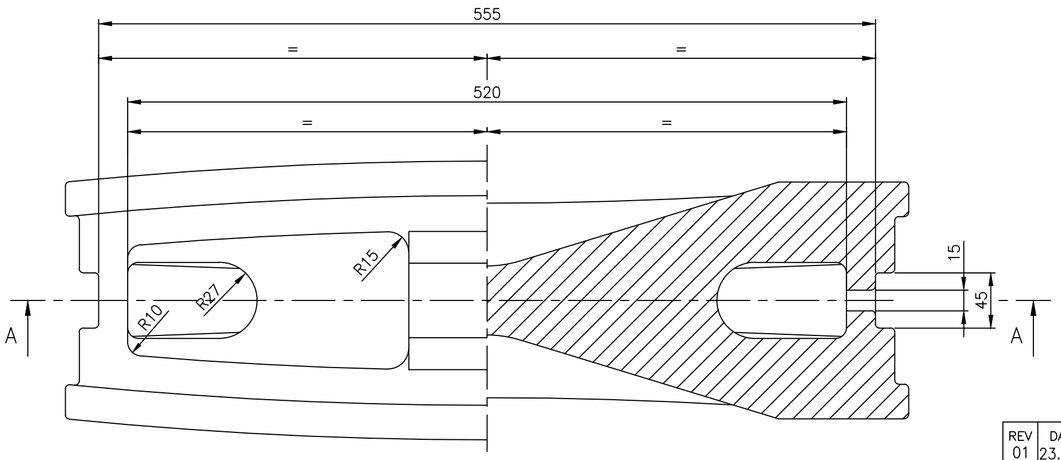

NOTE

01. NECESSARY MACHINING ALLOWANCES HAVE BEEN ADDED ON ALL MACHINABLE SURFACES.
02. FOR PERMISSIBLE DEVIATIONS ON NON TOLERANCED CASTING DIMENSION REFER APPLICABLE QUALITY PROCEDURE.
03. FINISH MACHINED DIMENSIONS ARE INDICATED WITHIN BRACKETS FOR INFORMATION ONLY.
04. LETTERS– SIZE,MATL.& SUPPLIERS CODE ARE TO BE CAST IN THE INDICATED ZONE.
05. CASTING SHALL COMPLY WITH THE REQUIREMENTS OF APPLICABLE QUALITY PROCEDURE.
06. UNSPECIFIED CASTING RADII = R3 TO R5
07. HEIGHT OF CASTING LETTERS = 8 mm
08. ⊗ INDICATES SURFACE TO BE MACHINED.

MATL.MARK*	SL No.	DESCRIPTION	MATL CODE	MATL SPECN	HEAT TREATMENT	SCRAP SORT	NET WT (kg)	GROSS WT (kg)	DRAWING No / COMPONENT CODE	ITEM No
WC9	02	CASTING	92 201 747	ASTM A217 WC9– CERTIFY	NORMALISED & TEMPERED	–	214	–	2-V-NE97-14235R/1 92 201 747 0000	007
WCB	01	CASTING	92 201 746	ASTM A216 WCB– CERTIFY	NORMALISED	–	214	–	2-V-NE96-14235R/1 92 201 746 0000	007

REV	DATE	ALTERED RAVI PRATAP SINGH
01	23.10.17	CHD & APPD SSK & KRS
ZONE	DIMENSIONS ø602 WAS ø610	

CAUTION: The information on this document is the property of BHARAT HEAVY ELECTRICALS LTD. It must not be used directly or indirectly in any way detrimental to the interest of the company.

TYPE OF PRODUCT
OR NAME OF
CUSTOMER/PROJECT

BHARAT HEAVY ELECTRICALS LTD.,
UNIT: HIGH PRESSURE BOILER PLANT.
TIRUCHIRAPALLI -620014.
365–120

	NAME	SIGN	DATE	NO.OF VAR.
DRN	M.SRINIVASAN		24.03.08	
CHD	P.BOOMINATHAN		24.03.08	
APPD	M.RAJAKUMAR		24.03.08	

DEPT VL
CODE 320
SCALE NTS
WEIGHT (KG). REF TABLE
REFERENCE INFORMATIONS
CAD :C214235R
NO. OF ITEMS

TITLE
WEDGE
(22"–C300)

CARD CODE U 01

DRAWING NO. 2-V-0000-14235R

REV 01

Size A2

DRAWING NO. 2-V-0000-14275R

ALL DIMENSIONS ARE IN MILLIMETRES. FOR TOLERANCES OF UNTOLERANCED DIMENSIONS DURING MANUFACTURE REFER RELEVANT QCP / QP

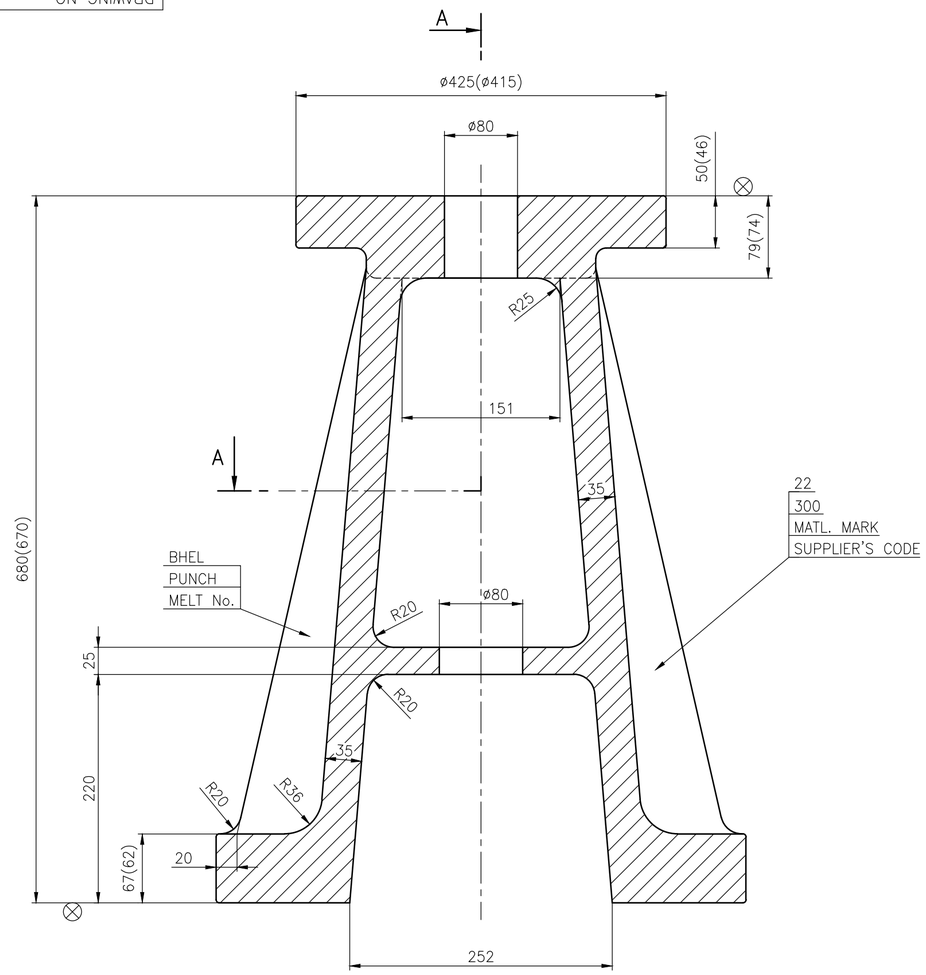

SECTION–CC

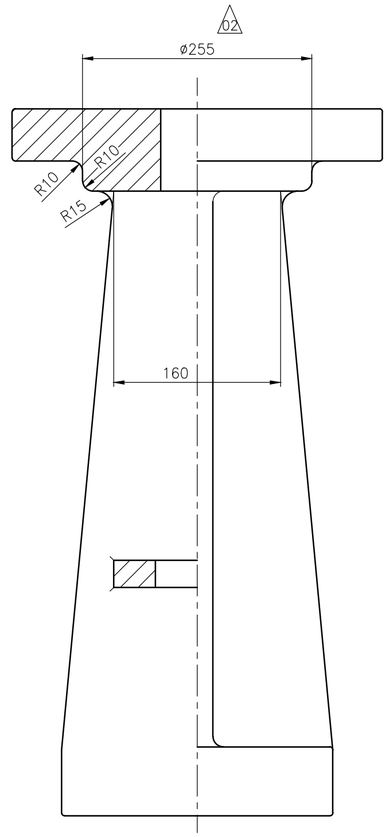

SECTION–BB

NOTE

01. NECESSARY MACHINING ALLOWANCES HAVE BEEN ADDED ON ALL MACHINABLE SURFACES.
02. FOR PERMISSIBLE DEVIATIONS ON NON TOLERANCED CASTING DIMENSION REFER APPLICABLE QUALITY PROCEDURE.
03. FINISH MACHINED DIMENSIONS ARE INDICATED WITHIN BRACKETS FOR INFORMATION ONLY.
04. LETTERS– SIZE,MATL.& SUPPLIERS CODE ARE TO BE CAST IN THE INDICATED ZONE.
05. CASTING SHALL COMPLY WITH THE REQUIREMENTS OF APPLICABLE QUALITY PROCEDURE.
06. UNSPECIFIED CASTING RADII = R5
07. HEIGHT OF CASTING LETTERS = 25 mm
08. ⊗ INDICATES SURFACE TO BE MACHINED.

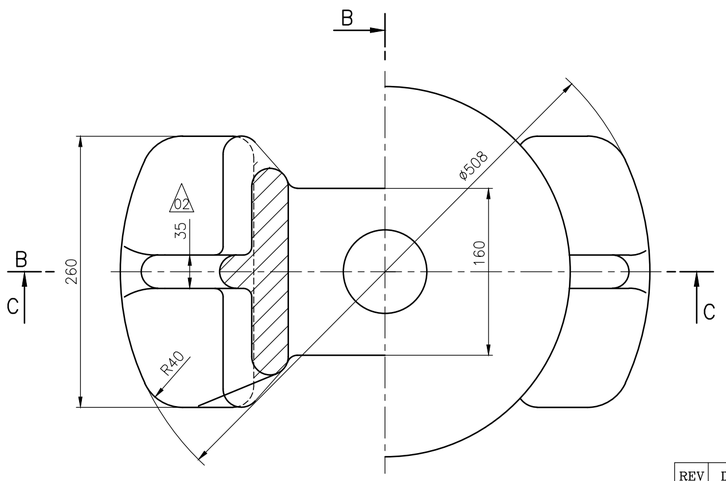

SECTION–AA

REV	DATE	ALTERED	
02	28.09.12	M.SRINIVASAN CHD & APPD SSK & KRS	DIMENSION ø255 WAS ø220 AND DIMENSION 35 INCLUDED. DCP:801396
01	30.12.09	M.SRINIVASAN CHD & APPD M.RAJAKUMAR	DIMENSION ø425 (ø415) WAS ø355(ø347) DCP:801016

ZONE

SL. No.	DESCRIPTION	MATL CODE	MATL SPECN	HEAT TREATMENT	SCRAP SORT	NET WT (kg)	GROSS WT (kg)	DRAWING No / COMPONENT CODE	ITEM No
01	CASTING	92 201 753	ASTM A216 WCB– CERTIFY	NORMALISED	–	177	–	2.V.NE96.14275R/02 92 201 753 0000	027

TYPE OF PRODUCT
OR NAME OF
CUSTOMER/PROJECT

BHARAT HEAVY ELECTRICALS LTD.,
UNIT: HIGH PRESSURE BOILER PLANT.
TIRUCHIRAPALLI -620014.
365–120

	NAME	SIGN	DATE	NO.OF VAR.
DRN	M.SRINIVASAN		24.03.08	
CHD	P.BOOMINATHAN		24.03.08	
APPD	M.RAJAKUMAR		24.03.08	

DEPT VL
CODE 320
SCALE NTS
WEIGHT (KG). REF TABLE
REFERENCE INFORMATIONS
CAD :C214275R
NO. OF ITEMS

TITLE
YOKE
(22"–C300)

CARD CODE U 01

DRAWING NO. 2–V–0000–14275R

REV 02

Size A2

CAUTION: The information on this document is the property of BHARAT HEAVY ELECTRICALS LTD. It must not be used directly or indirectly in any way detrimental to the interest of the company.

DRAWING NO. 2-V-0000-14526P

ALL DIMENSIONS ARE IN MILLIMETRES. FOR TOLERANCES OF UNTOLERANCED DIMENSIONS DURING MANUFACTURE REFER RELEVANT QCP / QP

SL. No.	DRAWING NUMBER	MATL.SPECN.	*MATL. MARK	MATERIAL CODE	Wt.(kg)	DIMENSIONS			APPLICABLE VALVES
						øD	ød	T	
01	2-V-N025-14526P	A105 NR, CERTIFY	A105	92 201 913	0.62	98	70	23	3"-150C-GV
02	2-V-N033-14526P	A105 NR, CERTIFY	A105	92 201 914	1.06	132	94	20	4"-300C-GV
03	2-V-N001-14526P	A105 NR, CERTIFY	A105	92 201 915	1.90	178	145	30	6"-150C-GV
04	2-V-N009-14526P	A105 NR, CERTIFY	A105	92 201 916	2.70	232	195	29	8"-150C-GV
05	2-V-N057-14526P	A105 NR, CERTIFY	A105	92 201 917	3.63	286	246	29	10"-150C-GV
06	2-V-N041-14526P	A105 NR, CERTIFY	A105	92 201 918	4.40	338	297	29	12"-150C-GV
07	2-V-N017-14526P	A105 NR, CERTIFY	A105	92 201 919	2.50	188	145	30	6"-300C-GV
08	2-V-N089-14526P	A105 NR, CERTIFY	A105	92 201 920	3.5	242	195	29	8"-300C-GV
09	2-V-N065-14526P	A105 NR, CERTIFY	A105	92 201 921	5.24	302	246	29	10"-300C-GV
10	2-V-N105-14526P	A105 NR, CERTIFY	A105	92 201 922	5.60	348	297	29	12"-300C-GV
11	2-V-N297-14526P	A182 F22CL3. NT, CERTIFY	F22	92 201 923	1.06	132	94	20	4"-150C-GV
12	2-V-N306-14526P	A182 F22CL3. NT, CERTIFY	F22	92 201 924	1.9	178	145	30	6"-150C-GV
13	2-V-N274-14526P	A182 F22CL3. NT, CERTIFY	F22	92 201 925	2.70	232	195	29	8"-150C-GV
14	2-V-N305-14526P	A182 F22CL3. NT, CERTIFY	F22	92 201 926	3.63	286	246	29	10"-150C-GV
15	2-V-N258-14526P	A182 F22CL3. NT, CERTIFY	F22	92 201 927	0.62	98	70	23	3"-300C-GV
16	2-V-N229-14526P	A182 F22CL3. NT, CERTIFY	F22	92 201 928	2.5	188	145	30	6"-300C-GV
17	2-V-N230-14526P	A182 F22CL3. NT, CERTIFY	F22	92 201 929	3.5	242	195	29	8"-300C-GV
18	2-V-N304-14526P	A182 F22CL3. NT, CERTIFY	F22	92 201 930	5.24	302	246	29	10"-300C-GV
19	2-V-N309-14526P	A182 F22CL3. NT, CERTIFY	F22	92 201 931	5.60	348	297	29	12"-300C-GV
20	2-V-F502-14526P	A105 NR, CERTIFY	A105	92 201 932	0.98	102	60	27	3"-600C-GV
21	2-V-F532-14526P	A182 F22CL3. NT, CERTIFY	F22	92 201 933	0.98	102	60	27	3"-600C-GV
22	2-V-F503-14526P	A105 NR, CERTIFY	A105	92 201 934	1.67	130	86	30	4"-600C-GV
23	2-V-F533-14526P	A182 F22CL3. NT, CERTIFY	F22	92 201 935	1.67	130	86	30	4"-600C-GV
24	2-V-F504-14526P	A105 NR, CERTIFY	A105	92 201 936	3.8	184	136	42	6"-600C-GV
25	2-V-F534-14526P	A182 F22CL3. NT, CERTIFY	F22	92 201 937	3.8	184	136	42	6"-600C-GV
26	2-V-F505-14526P	A105 NR, CERTIFY	A105	92 201 938	5.88	232	184	50	8"-600C-GV
27	2-V-F535-14526P	A182 F22CL3. NT, CERTIFY	F22	92 201 939	5.88	232	184	50	8"-600C-GV
28	2-V-F506-14526P	A105 NR, CERTIFY	A105	92 201 940	7.0	284	232	44	10"-600C-GV
29	2-V-F536-14526P	A182 F22CL3. NT, CERTIFY	F22	92 201 941	7.0	284	232	44	10-600C-GV
30	2-V-F507-14526P	A105 NR, CERTIFY	A105	92 201 942	8.7	336	284	46	12"-600C-GV
31	2-V-F537-14526P	A182 F22CL3. NT, CERTIFY	F22	92 201 943	8.7	336	284	46	12"-600C-GV
32	2-V-N316-14526P	A105 NR, CERTIFY	A105	92 201 944	10.6	390	325	38	14"-150C-GV
33	2-V-N350-14526P	A105 NR, CERTIFY	A105	92 201 945	10.3	431	375	38	16"-150C-GV
34	2-V-N575-14526P	A105 NR, CERTIFY	A105	92 201 946	13.1	482	425	42	18"-150C-GV
35	2-V-N224-14526P	A105 NR, CERTIFY	A105	92 201 947	16.1	535	475	44	20"-150C-GV
36	2-V-N799-14526P	A105 NR, CERTIFY	A105	92 201 948	21.1	640	575	44	24"-150C-GV
37	2-V-N435-14526P	A105 NR, CERTIFY	A105	92 201 949	7.9	371	321	38	14"-300C-GV
38	2-V-N436-14526P	A105 NR, CERTIFY	A105	92 201 950	12.5	425	371	48	16"-300C-GV
39	2-V-N437-14526P	A105 NR, CERTIFY	A105	92 201 951	17.3	525	465	48	20"-300C-GV
40	2-V-K904-14526P	A182 F22CL3. NT, CERTIFY	F22	92 201 952	10.6	390	325	38	14"-150C-GV
41	2-V-K905-14526P	A182 F22CL3. NT, CERTIFY	F22	92 201 953	10.3	431	375	38	16"-150C-GV
42	2-V-K906-14526P	A182 F22CL3. NT, CERTIFY	F22	92 201 954	13.1	482	425	42	18"-150C-GV
43	2-V-K907-14526P	A182 F22CL3. NT, CERTIFY	F22	92 201 955	16.1	535	475	44	20"-150C-GV
44	2-V-K908-14526P	A182 F22CL3. NT, CERTIFY	F22	92 201 956	21.1	640	575	44	24"-150C-GV
45	2-V-N622-14526P	A182 F22CL3. NT, CERTIFY	F22	92 201 957	7.9	371	321	38	14"-300C-GV
46	2-V-N616-14526P	A182 F22CL3. NT, CERTIFY	F22	92 201 958	12.5	425	371	48	16"-300C-GV
47	2-V-K909-14526P	A182 F22CL3. NT, CERTIFY	F22	92 201 959	17.3	525	465	48	20"-300C-GV
48	2-V-F606-14526P	A182 F6A CL3 NT, CERTIFY	F6A	92 201 960	7.0	284	232	44	10"-600C-GV
49	2-V-NA60-14526P	A182 F6A CL3. NT, CERTIFY	F6A	92 201 961	5.6	348	297	29	12"-300C-GV
50	2-V-Z030-14526P	A182 F6A CL3, NT,CERTIFY	F6A	92 201 962	3.5	195	142	32	6"-300C-FV
51	2-V-NE67-14526P	A182 F6A CL3. NT,CERTIFY	F6A	92 201 963	5.24	302	246	29	10"-300C-GV
52	2-V-F510-14526P	A182 F6A CL3. NT, CERTIFY	F6A	92 201 964	8.7	336	284	46	12"-600C-GV
53	2-V-U577-14526P	A182 F316. SH, CERTIFY	F316	92 203 412	0.59	95	71	24	3"-150C-FV
54	2-V-U578-14526P	A182 F316. SH, CERTIFY	F316	92 203 413	3.5	195	142	32	6"-300C-FV
55	2-V-U562-14526P	A182 F316. SH, CERTIFY	F316	92 203 414	2.5	277	249	27	10"-150C-GV(ECO)
56	2-V-U563-14526P	A182 F316. SH, CERTIFY	F316	92 203 415	6.8	335	299	30	12"-150C-GV(ECO) 12"-300C-GV(ECO)
57	2-V-U564-14526P	A182 F316. SH, CERTIFY	F316	92 203 416	1.44	174	146	26	6"-150C-GV(ECO) 6"-300C-GV(ECO)
58	2-V-U565-14526P	A182 F316. SH, CERTIFY	F316	92 203 417	2.2	228	198	28	8"-150C-GV(ECO) 8"-300C-GV(ECO)
59	2-V-U566-14526P	A182 F316. SH, CERTIFY	F316	92 203 418	3.5	285	250	30	10"-300C-GV(ECO)
60	2-V-U568-14526P	A182 F316. SH, CERTIFY	F316	92 203 419	0.98	102	60	27	3"-600C-GV
61	2-V-U569-14526P	A182 F316. SH, CERTIFY	F316	92 203 420	5.9	232	184	50	8"-600C-GV
62	2-V-U570-14526P	A182 F316. SH, CERTIFY	F316	92 203 421	7.0	284	232	44	10"-600C-GV
63	2-V-U571-14526P	A182 F316. SH, CERTIFY	F316	92 203 422	8.7	336	284	46	12"-600C-GV
64	2-V-U579-14526P	A182 F316. SH, CERTIFY	F316	92 203 424	0.93	128	96	21	4"-150C-FV

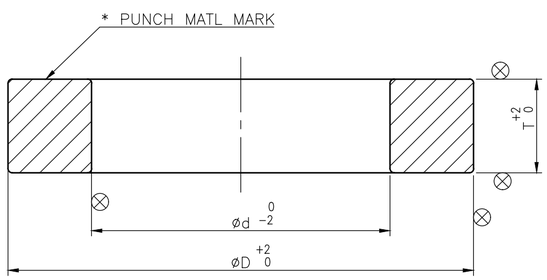

NOTES:-

1. FORGING SHALL BE MADE IN SUCH A WAY THAT MACHINING CAN BE DONE IN THE SPECIFIED DIMENSION SHOWN IN TABULAR COLUMN.
2. ⊗ INDICATES THE SURFACES WHICH ARE TO BE MACHINED FURTHER.
3. FORGING SHALL BE COMPLY WITH REQUIREMENTS OF LATEST APPLICABLE QUALITY WORK INSTRUCTIONS.

REV	DATE	ALTERED	A.VSMANIAN
01	30.01.16	CHD & APPD	MS & KRS
ZONE	SL. No. 53 TO 64 INCLUDED.		

CAUTION: The information on this document is the property of BHARAT HEAVY ELECTRICALS LTD. It must not be used directly or indirectly in any way detrimental to the interest of the company.

No OFF	DESCRIPTION	MATL CODE	MATL SPECN	HEAT TREATMENT	SCRAP SORT	NET WT (kg)	GROSS WT (kg)	DRAWING No	ITEM No
–	–	–	–	–	–	–	–	–	–

TYPE OF PRODUCT OR NAME OF CUSTOMER/PROJECT: CS

BHARAT HEAVY ELECTRICALS LTD.,
UNIT: HIGH PRESSURE BOILER PLANT.
TIRUCHIRAPALLI -620014.
365-120

	NAME	SIGN	DATE	NO.OF VAR.
DRN	M.SARAVANAN		18.01.10	–
CHD	S.SATHEES		18.01.10	
APPD	M.RAJAKUMAR		18.01.10	

DEPT VL | CODE 320 | SCALE NTS. | WEIGHT (KG). REF. TABLE | REFERENCE INFORMATIONS | NO. OF ITEMS –

TITLE: SEAT RING (PROOF MACHINED FORGING)

CARD CODE: U 01

DRAWING NO. 2-V-0000-14526P

REV 01

Size A2

DRAWING NO 2-V-0000-14879R

ALL DIMENSIONS ARE IN MILLIMETRES. FOR TOLERANCES OF UNTOLERANCED DIMENSIONS DURING MANUFACTURE REFER RELEVANT QCP / QP

100

SECTION-XX

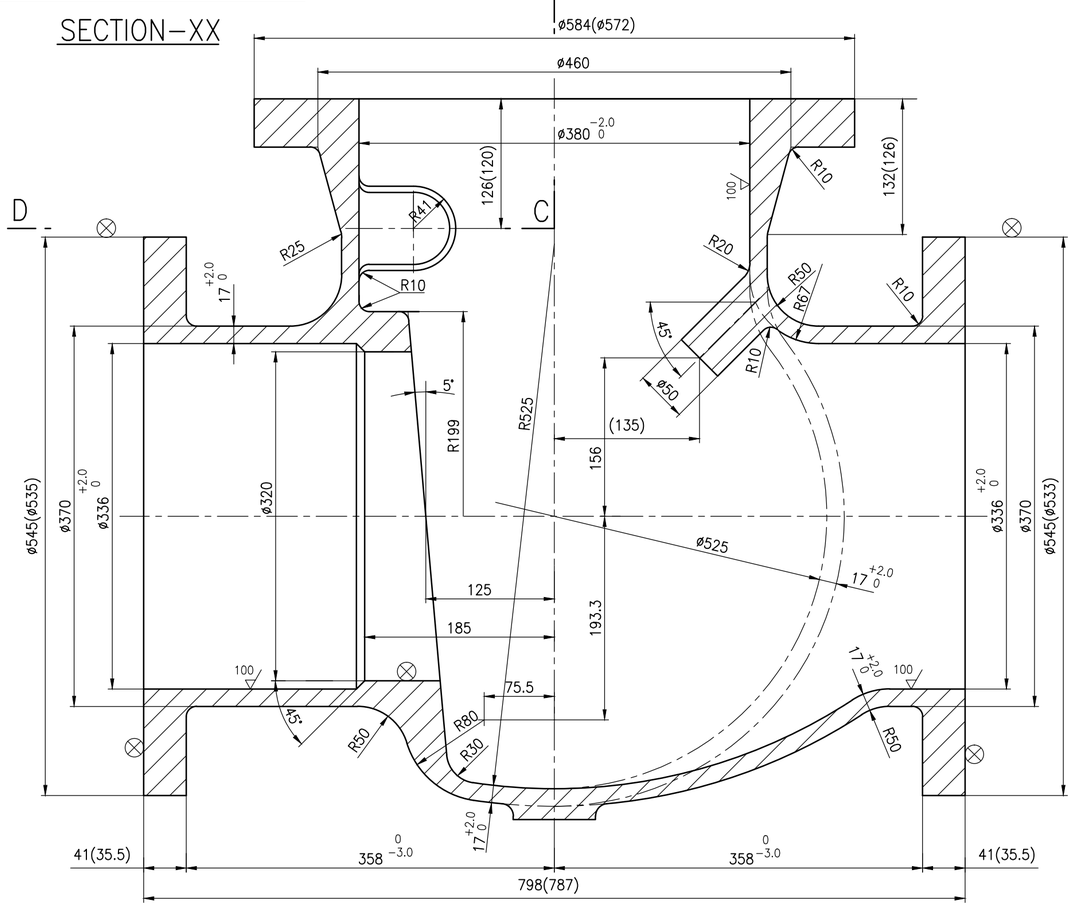

SECTION-XY

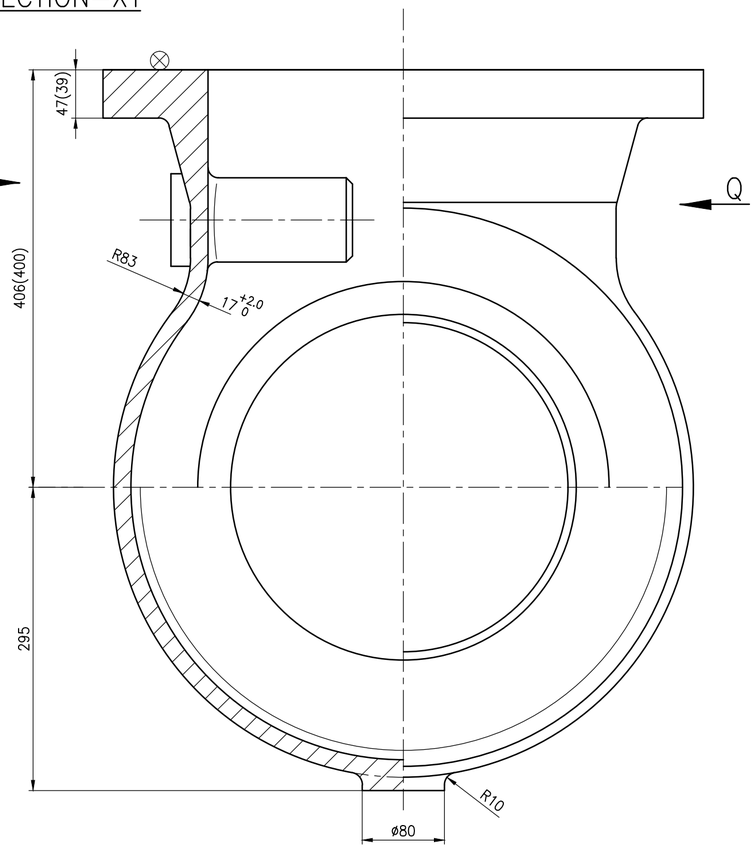

VIEW-P

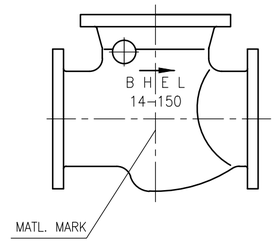

VIEW-Q

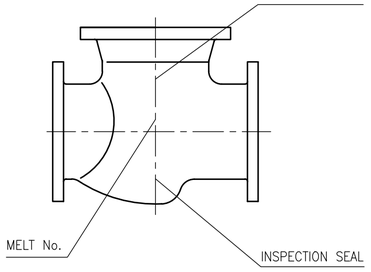

SECTION ABCD

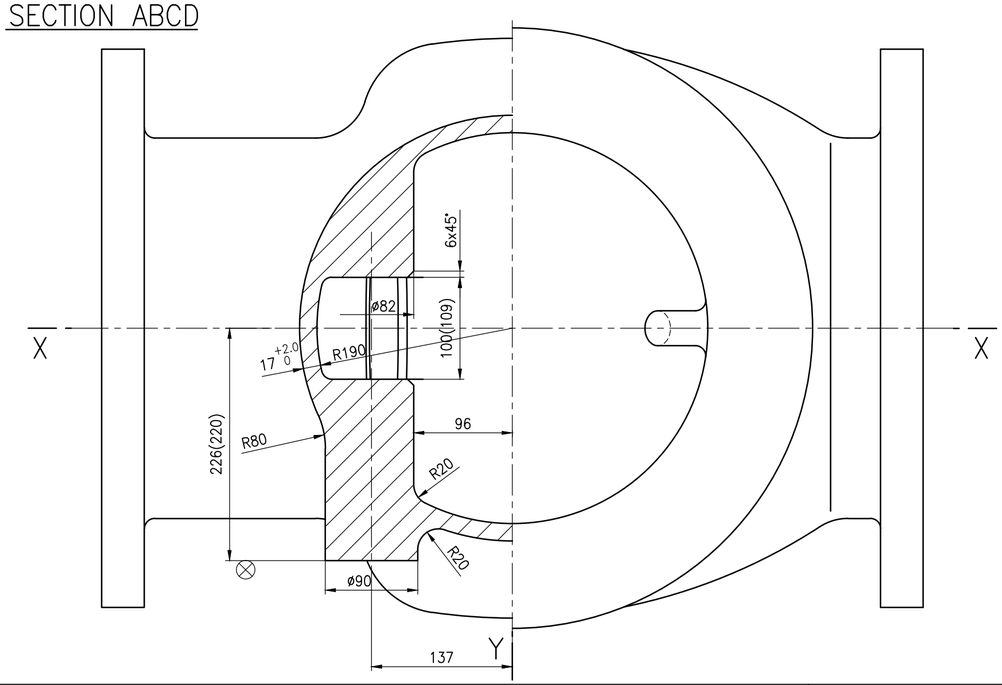

NOTES:

1. NECESSARY MACHINING ALLOWANCES HAVE BEEN ADDED ON ALL MACHINABLE SURFACES.
2. 100 CASTING SURFACES MUST BE OF HIGH QUALITY WITHOUT SURFACE UNEVENNESS.
3. FINISH MACHINED DIMENSIONS ARE INDICATED WITHIN BRACKETS FOR INFORMATION ONLY.
4. ALL DETAILS SHOWN IN VIEWS 'P' AND 'Q' EXCEPT MELT No. AND INSPECTION SEAL ARE TO BE CAST.
5. CASTING SHALL COMPLY WITH LATEST APPLICABLE QUALITY WORK INSTRUCTION.
6. HEIGHT OF THE CASTING LETTERS 25mm.
7. UNSPECIFIED CASTING RADII R3-R5
8. ⊗ SURFACE TO BE FURTHER MACHINED.

SL. No.	DRAWING No.	COMP. CODE	MATL. SPECN.	MATL. MARK
03	2-V-Z084-14879R	922032210000	CI, IS-210 Gr.FG260 ATTEST,AN	CI
02	2-V-Z083-14879R	922032200000	SA217 WC9, ATTEST,NT	WC9
01	2-V-Z082-14879R	922032190000	SA216 WCB, ATTEST,NR	WCB

No OFF	DESCRIPTION	MATL CODE	MATL SPECN	HEAT TREATMENT	SCRAP SORT	NET WT (kg)	GROSS WT (kg)	DRAWING No	ITEM No

TYPE OF PRODUCT
OR NAME OF
CUSTOMER/PROJECT

BHARAT HEAVY ELECTRICALS LTD.,
UNIT: HIGH PRESSURE BOILER PLANT.
TIRUCHIRAPALLI -620014.
365-120

	NAME	SIGN	DATE	NO.OF VAR.
DRN	V.BAIRAVAN		05.02.14	
CHD	S.SATHEES		05.02.14	
APPD	K.RAJASEKARAN		05.02.14	

REV	DATE	ALTERED
		CHD & APPD

ZONE

CAUTION: The information on this document is the property of BHARAT HEAVY ELECTRICALS LTD. It must not be used directly or indirectly in any way detrimental to the interest of the company.

DEPT VL
CODE 320
SCALE NTS
WEIGHT (KG). 354
REFERENCE INFORMATIONS
NO. OF ITEMS

TITLE
BODY
CASTING 14"/150 CLASS

CARD CODE U 01

DRAWING NO. REFER TABLE
2-V-0000-14879R

REV

Size A2

DRAWING NO 2-V-0000-14884R/1

ALL DIMENSIONS ARE IN MILLIMETRES. FOR TOLERANCES OF UNTOLERANCED DIMENSIONS DURING MANUFACTURE REFER RELEVANT QCP / QP

100

SECTION-XX

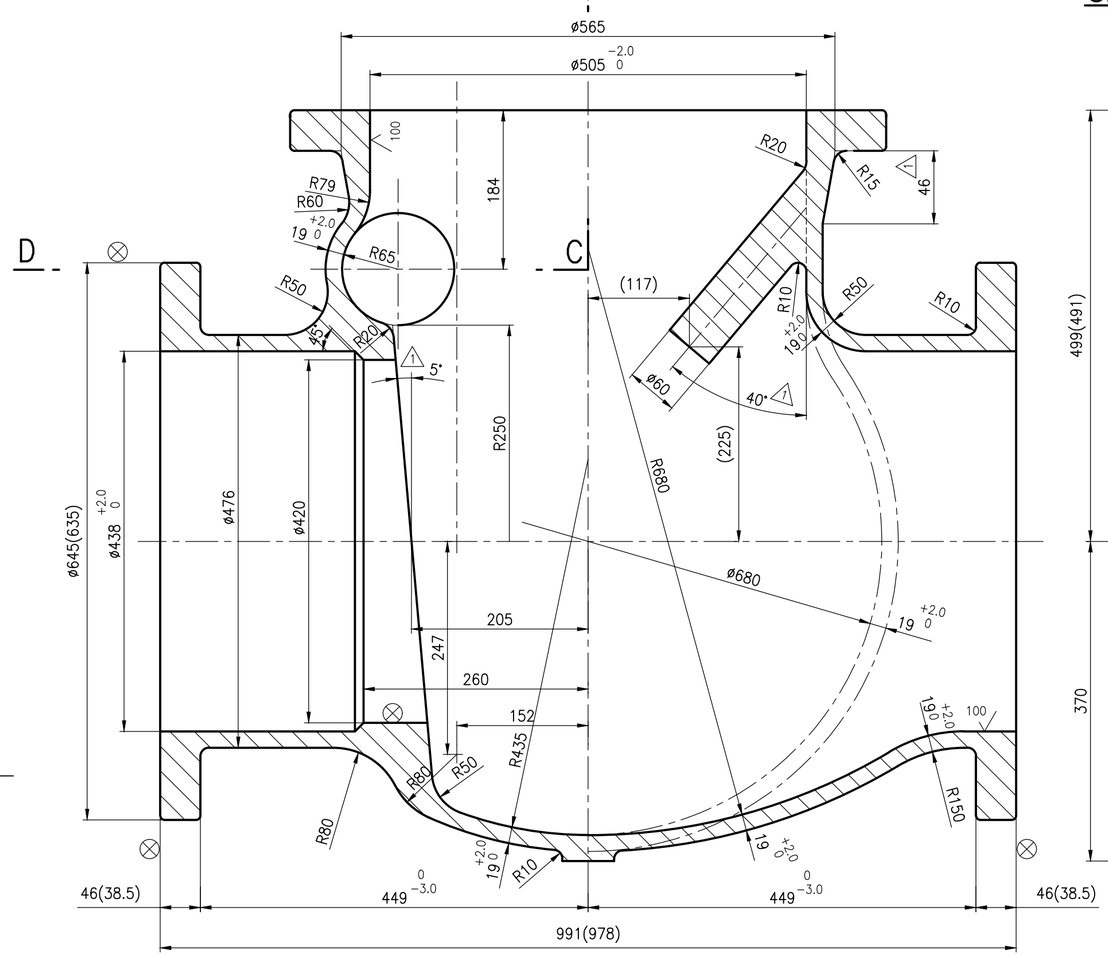

SECTION-YY

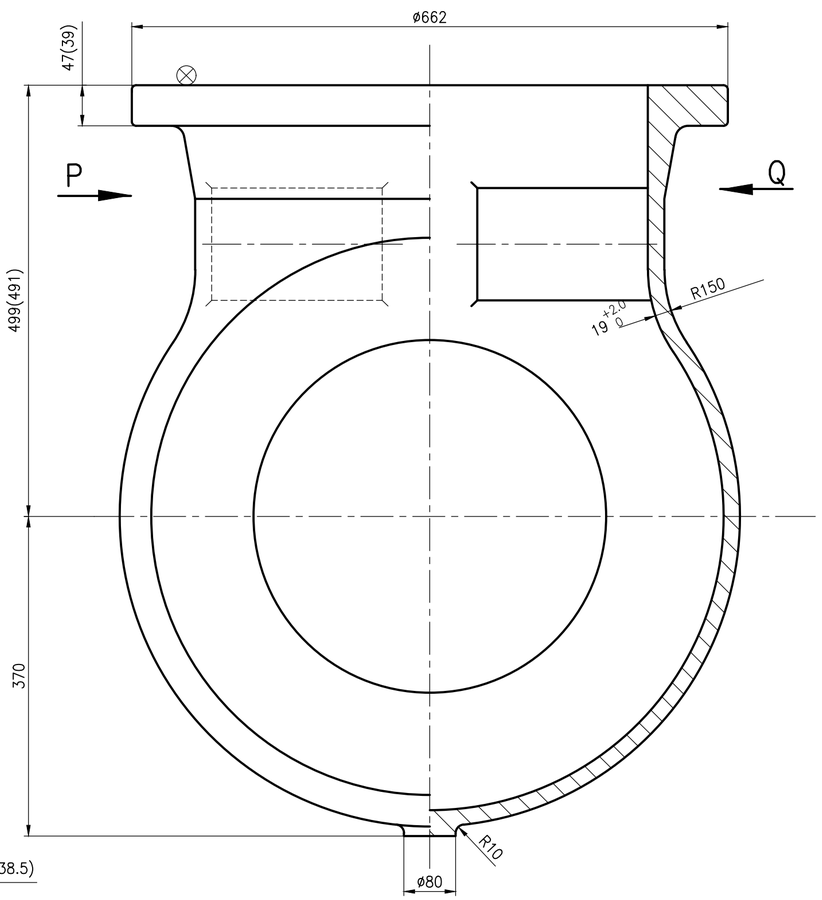

VIEW-P

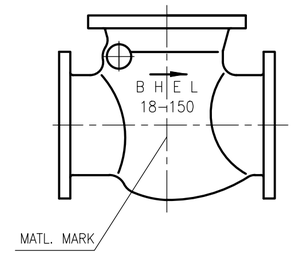

VIEW-Q

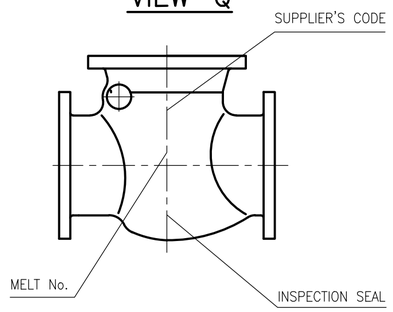

SECTION ABCD

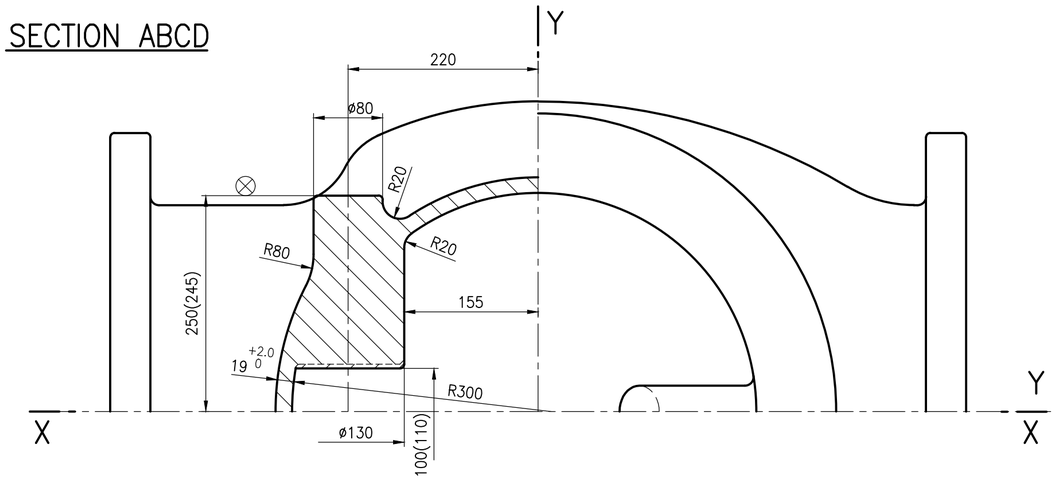

NOTES:

1. NECESSARY MACHINING ALLOWANCES HAVE BEEN ADDED ON ALL MACHINABLE SURFACES.
2. 100 CASTING SURFACES MUST BE OF HIGH QUALITY WITHOUT SURFACE UNEVENNESS.
3. FINISH MACHINED DIMENSIONS ARE INDICATED WITHIN BRACKETS FOR INFORMATION ONLY.
4. ALL DETAILS SHOWN IN VIEWS 'P' AND 'Q' EXCEPT MELT No. AND INSPECTION SEAL ARE TO BE CAST.
5. CASTING SHALL COMPLY WITH LATEST APPLICABLE QUALITY WORK INSTRUCTION.
6. HEIGHT OF THE CASTING LETTERS 25mm.
7. UNSPECIFIED CASTING RADII R3-R5
8. ⊗ SURFACE TO BE FURTHER MACHINED.

SL. No.	DRAWING No.	COMP. CODE	MATL. SPECN.	MATL. MARK
03	2-V-Z087-14884R/1	922032370000	CI, IS-210 Gr.FG260 ATTEST,AN	CI
02	2-V-Z086-14884R/1	922032360000	SA217 WC9, ATTEST,NT	WC9
01	2-V-Z085-14884R/1	922032350000	SA216 WCB, ATTEST,NR	WCB

No OFF	DESCRIPTION	MATL CODE	MATL SPECN	HEAT TREATMENT	SCRAP SORT	NET WT (kg)	GROSS WT (kg)	DRAWING No	ITEM No

TYPE OF PRODUCT
OR NAME OF
CUSTOMER/PROJECT

BHARAT HEAVY ELECTRICALS LTD.,
UNIT: HIGH PRESSURE BOILER PLANT.
TIRUCHIRAPALLI -620014.
365-120

	NAME	SIGN	DATE	NO.OF VAR.
DRN	V.BAIRAVAN		03.03.14	
CHD	S.SATHEES		03.03.14	
APPD	K.RAJASEKARAN		03.03.14	

REV	DATE	ALTERED	
1	05.09.15	CHD & APPD	VB SSK & KRS

ZONE: DIMENSION 46 AND ANGLES 40° & 5° INCLUDED.

DCP No.801991

CAUTION: The information on this document is the property of BHARAT HEAVY ELECTRICALS LTD. It must not be used directly or indirectly in any way detrimental to the interest of the company.

DEPT VL
CODE 320
SCALE NTS
WEIGHT (KG). ~522
REFERENCE INFORMATIONS
NO. OF ITEMS

TITLE: BODY
CASTING 18"/150 CLASS
CARD CODE U 01
DRAWING NO. REFER TABLE 2-V-0000-14884R
REV 1

Size A2

TP-DG-2-V-0000-03304R
CORPORATE DRG ID

FIRST ANGLE PROJECTION (ALL DIMENSIONS IN MILLIMETRES)

FOR TOLERANCES OF UNTOLERANCED DIMENSIONS DURING MANUFACTURE REFER RELEVANT QCP/Q.P

DRAWING No. 2-V-0000-03304R

CAUTION THE INFORMATION ON THIS DOCUMENT IS THE PROPERTY OF BHARAT HEAVY ELECTRICALS LTD. IT MUST NOT BE USED DIRECTLY OR INDIRECTLY IN ANY WAY DETRIMENTAL TO THE INTEREST OF THE COMPANY.

05-228/C

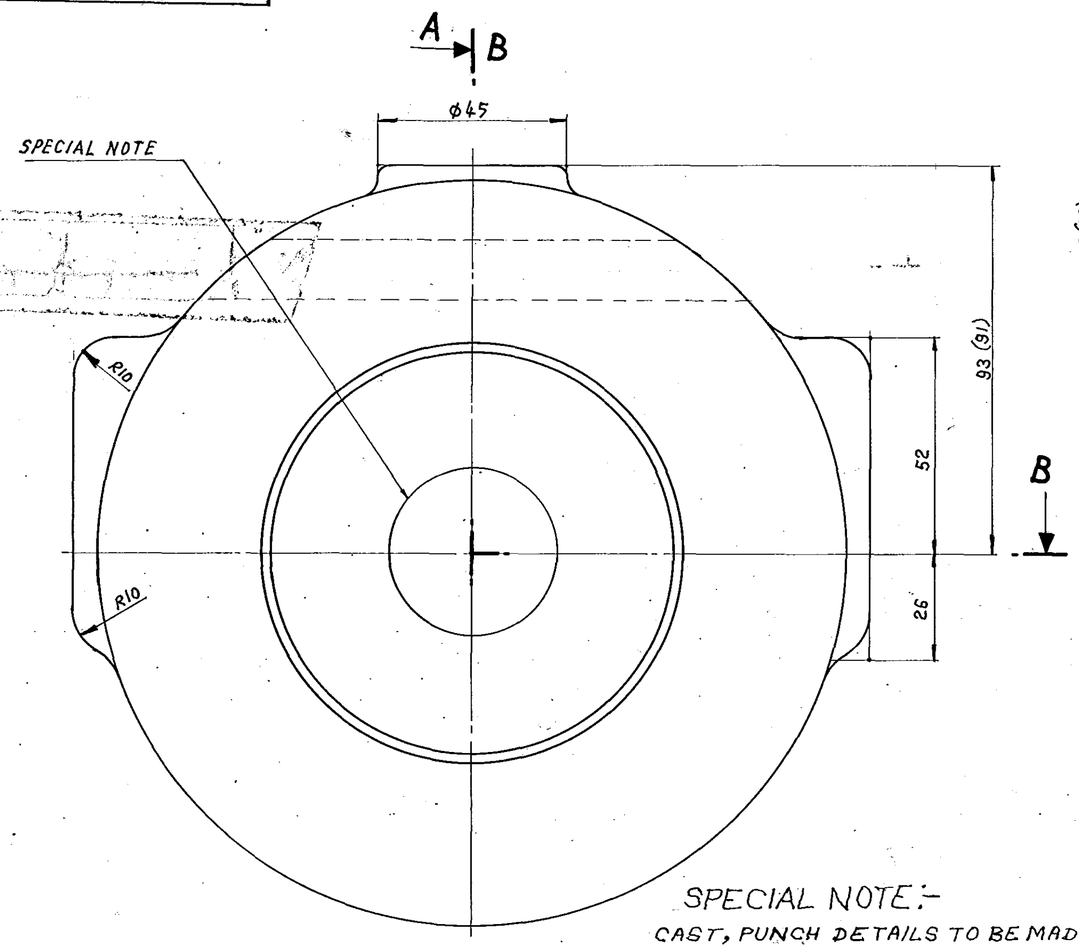

SPECIAL NOTE:-
CAST, PUNCH DETAILS TO BE MADE WITHIN THE AREA OF THE CIRCLE ϕ40mm SHOWN.

SECTION- AA

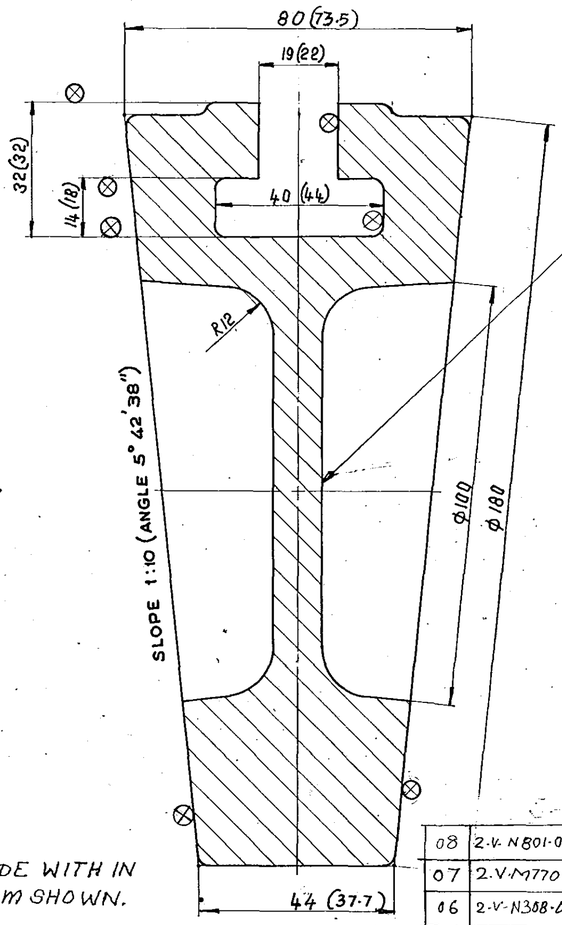

CAST- 6-150
MATL MARK
MELT NO:
INSPECTION SEAL
SUPPLIER'S CODE:

NOTE:-

1. NECESSARY MACHINING ALLOWANCES HAVE BEEN ADDED ON ALL MACHINABLE SURFACES
2. ⊗ SURFACES TO BE MACHINED
3. UNSPECIFIED CASTING RADII R3-R5
4. ▽100 CASTING SURFACES MUST BE HIGH QUALITY WITHOUT SURFACE UNEVENNESS
5. PERMISIBLE DIMENSIONAL DEVIATION OF CASTING SURFACES- REFER VL:STDC: (LATEST REV.)
6. FINISH MACHINED DIMENSIONS ARE INDICATED WITHIN BRACKETS
7. CASTINGS SHALL MEET THE REQUIREMENTS OF TDC NO: APPLICABLE WITH LATEST REVISION.

SECTION-BB

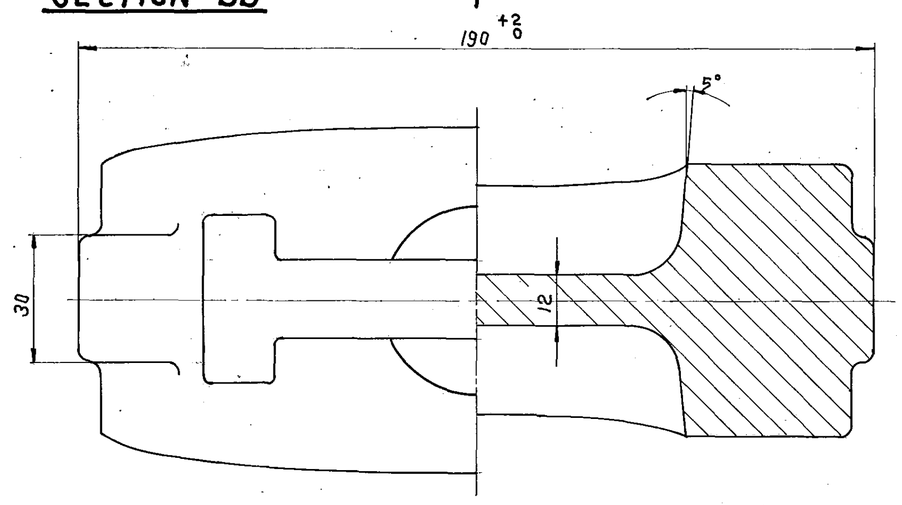

SL. No	DRAWING NO.	MATL. SPECN.	MATL. CODE	NET WT.	MATL. MARK	ITEM NO.
08	2-V-N801-03304R	ASTM A216 WCC NORMALISED.	92201049	8.6	WCC	4
07	2-V-M770 03304R	A352 LCB CERTIFY	92 200 898	8.6	LCB	4
06	2-V-N308-03304R	ASTM A217 WC9 CERTIFY N&T	92200 428	8.6	WC9	4
05.	2.V.N339.03304R	ASTM A351 CF8M CERTIFY S.H.	92 200 405	8.6	CF8M	4
04	2-V-N306-03304R	ASTM A217 WC6 CERTIFY N&T	92200 345	8.6	WC6	4
03	2-V-N284-03304R	ASTM A351 CF8 CERTIFY SOLUTION HEATTREATED	92200314	8.6	CF8	4
02.	2.V.N223.03304R	A351 CF8C CERTIFY SOLUTION HEATTREATED	92 200 1610000	8.6	CF8C	4
01	2-V-N001-03304R	ASTM A216 WCB NORMALISED	92 034 280 0000	8.6	A216 WCB	4

TYPE OF PRODUCT OR NAME OF CUSTOMER/PROJECT

REV	DATE	ALTD	CHD & APPD
07	16-03-99	N.D.PAL	

1. SL.NO. 8 INCLUDED.

REV	DATE	ALTD	CHD & APPD
06	17-6-97		

SL.NO. 07 INCLUDED.

REV	DATE	ALTD	CHD & APPD
05	10-11-95	N.D.PAL	

SL.No. 6 INCLUDED.

REV	DATE	ALTD	CHD & APPD
04	3-10-95		

SL.NO. 05 INCLUDED.

REV	DATE	ALTD	CHD & APPD
03	5-8-95		

SL.No. 04 INCLUDED.

REV	DATE	ALTD	CHD & APPD
02	31-03-95	N.D.PAL	

SL.NO. 3 IS INCLUDED

REV	DATE	ALTERED	CHECKED	ZONE
01	20-4-94			1

SL.NO. 2 INCLUDED. TABLE FOR TDC NO. TO DIFFERENT MATL. ADDED.

Bharat Heavy Electricals Ltd.,
BOILER PLANT UNIT
TIRUCHIRAPALLI-620 014

	NAME	SIGN	DATE
DRN	N.DHANAPAL		4-5-88
CHD	N.DHANAPAL		4-5-88
APPD	S.KUMAR		5/5/88

NO. OF VAR

DEPT	GRADE OF UNTOL. DIM	SCALE	WEIGHT (kg)	REF TO ASSY / OLD DRG	ITEM NO.
320		NTS	8.6	–	

CODE: VL

TITLE: WEDGE 6"/C150

CARD CODE: U 01

DRAWING NO. 2-V-0000-03304R

REV 07

Size A2

TP-DG-2-V-0000-03304R
CORPORATE DRG ID

DRAWING NO. 2-V-0000-05885R/01

ALL DIMENSIONS ARE IN MILLIMETRES. FOR TOLERANCES OF UNTOLERANCED DIMENSIONS DURING MANUFACTURE REFER RELEVANT QCP / QP

SECTION–AA

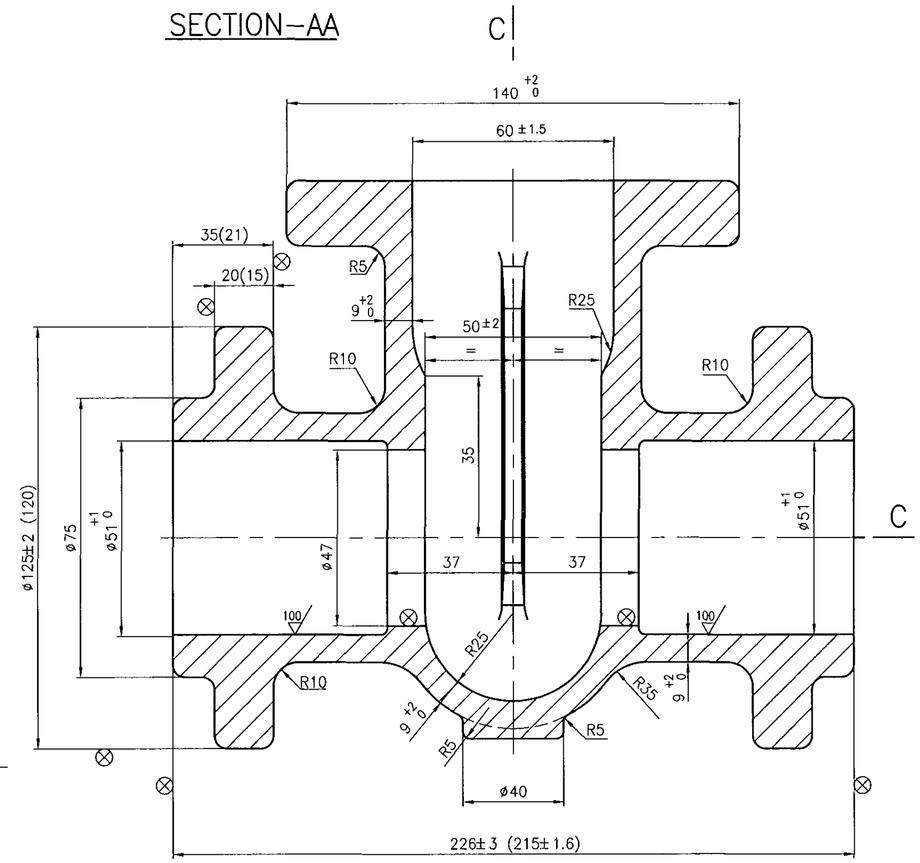

SECTION–BB

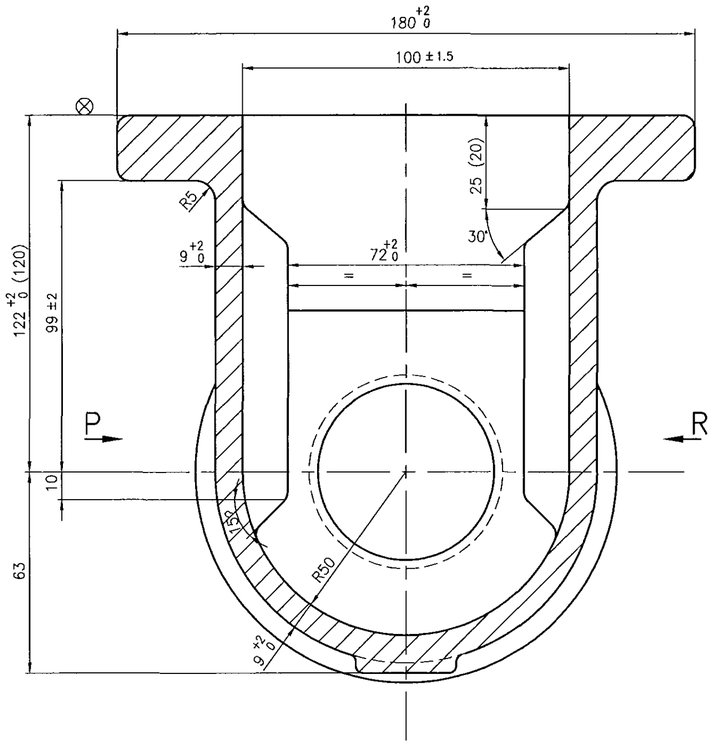

CAST IDENTIFICATION MARK

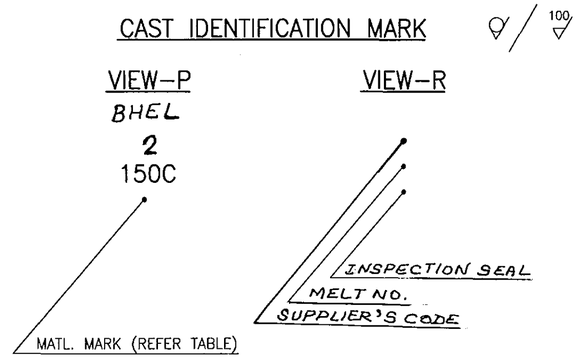

NOTES:–

1. CASTING SHALL COMPLY WITH REQUIREMENTS OF LATEST APPLICABLE QUALITY PROCEDURE.
2. NECESSARY MACHINING ALLOWANCES HAVE BEEN ADDED ON ALL MACHINABLE SURFACES.
3. 100 CASTING SURFACES MUST BE OF HIGH QUALITY WITHOUT SURFACE UNEVENNESS.
4. UNSPECIFIED CASTING RADII R3 TO R5.
5. HEIGHT OF CASTING LETTERS–20mm.
6. ⊗ SURFACES TO BE MACHINED.
7. FINISH–MACHINED DIMENSIONS ARE INDICATED WITHIN BRACKETS.
8. MELT No. & INSPECTION SEAL TO BE PUNCHED REST OF THE DETAILS ARE TO BE CAST.
9. RISER REMAINS ARE TO COMPLETELY REMOVED SUITABLY.

* SPECIAL NOTES:–

1. GUIDE RIB DIMENSIONS TO BE MAINTAINED WITHIN THE TOLERANCES INDICATED
2. BOTH GUIDE RIBS TO BE COPLANER AND TRUELY VERTICAL.
3. PROPER MATCHING FOR GUIDE RIBS WITH MACHINED WEDGE TO BE ENSURED BEFORE ACCEPTING CAST BODIES PREFERABLE AT THE FOUNDARY.

SECTION–CC

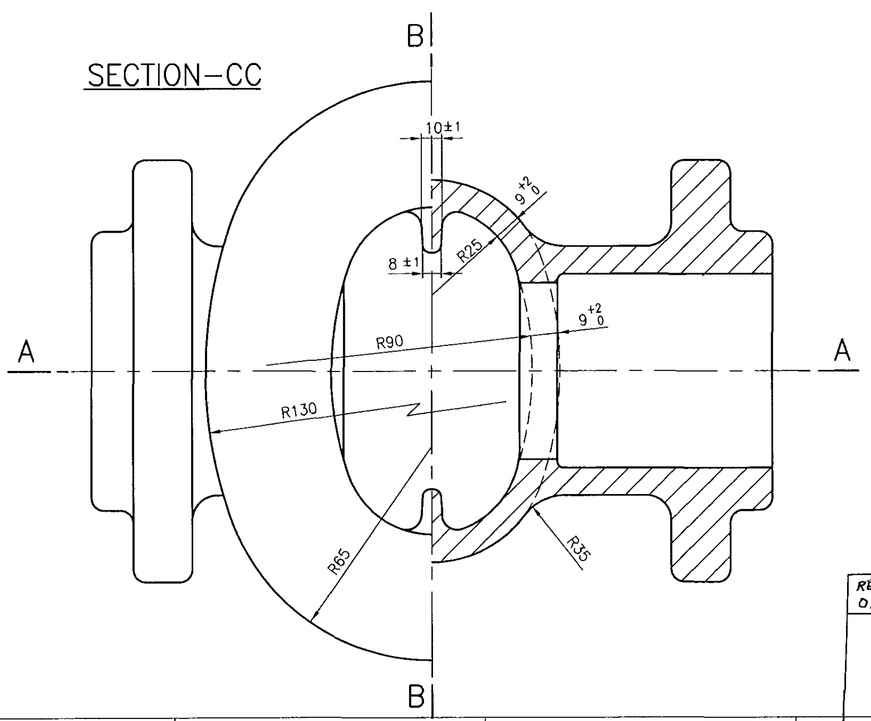

DRG. RETRACED WITH REVISION 00 ON 11.07.97

SL No	MATL. MARK TO BE CAST	MATL CODE	MATL SPECN	HEAT TREATMENT	SCRAP SORT	NET WT (kg)	GROSS WT (kg)	DRAWING No	ITEM No
04	A217 WC9	92 200 323	A217 WC9 ATTEST	NT	20	–		2VN30105885R/01	01
03	A217 WC6	92 200 322	A217 WC6 ATTEST	NT	20	–		2VN30005885R/01	01
02	A216 WCC	92 200 321	A216 WCC ATTEST	NR	10	–		2VN29905885R/01	01
01	A216 WCB	92 200 320	A216 WCB ATTEST	NR	10	–		2VN29805885R/01	01

REV.	DATE	ALTD:- / CHD & APPD:-
02		

REV	DATE	ALTERED
01	15.7.97	CHD & APPD

ZONE

DIMENSIONS DIA 40 & TAPER LENGTH 25 REMOVED IN INLET & OUTLET

RFER DCN.CS: 0725

CAUTION: The information on this document is the property of BHARAT HEAVY ELECTRICALS LTD. It must not be used directly or indirectly in any way detrimental to the interest of the company.

TYPE OF PRODUCT OR NAME OF CUSTOMER/PROJECT: CS

BHARAT HEAVY ELECTRICALS LTD.
UNIT: HIGH PRESSURE BOILER PLANT.
TIRUCHIRAPALLI -620014.
365–120

	NAME	SIGN	DATE	NO.OF VAR.
DRN	T.R.R.MURTHY	T.R.R.M	11.07.97	–
CHD	T.R.R.MURTHY	T.R.R.M	11.07.97	
APPD	A.VISWANATHAN		11.07.97	

DEPT	SCALE	WEIGHT (KG).	REFERENCE INFORMATIONS	NO. OF ITEMS
VL / CODE 320	NTS.	11.5	CAD:C205885R	–

TITLE	CARD CODE	DRAWING NO.	REV
BODY (2"–C150)	U 01	2–V–0000–05885R	01

Size A2

DRAWING NO. 2-V-0000-13611R

ALL DIMENSIONS ARE IN MILLIMETRES. FOR TOLERANCES OF UNTOLERANCED DIMENSIONS DURING MANUFACTURE REFER RELEVANT QCP / QP

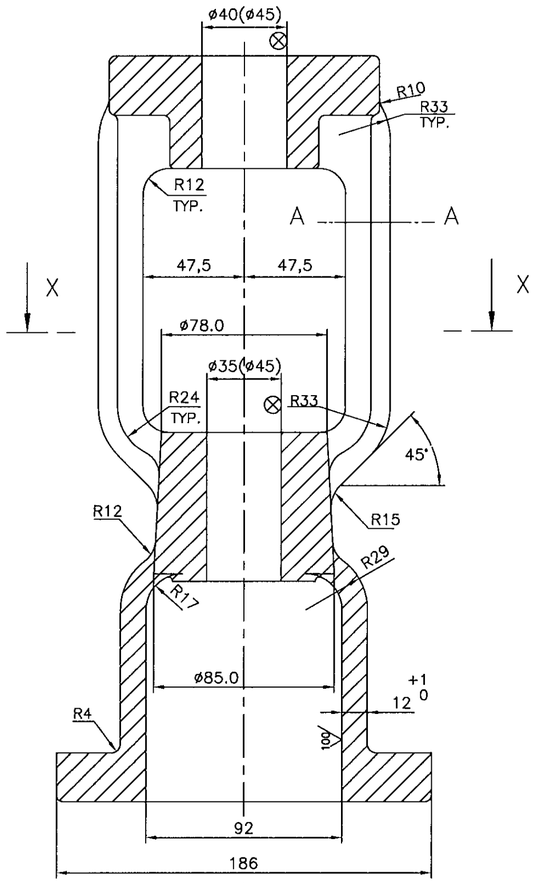

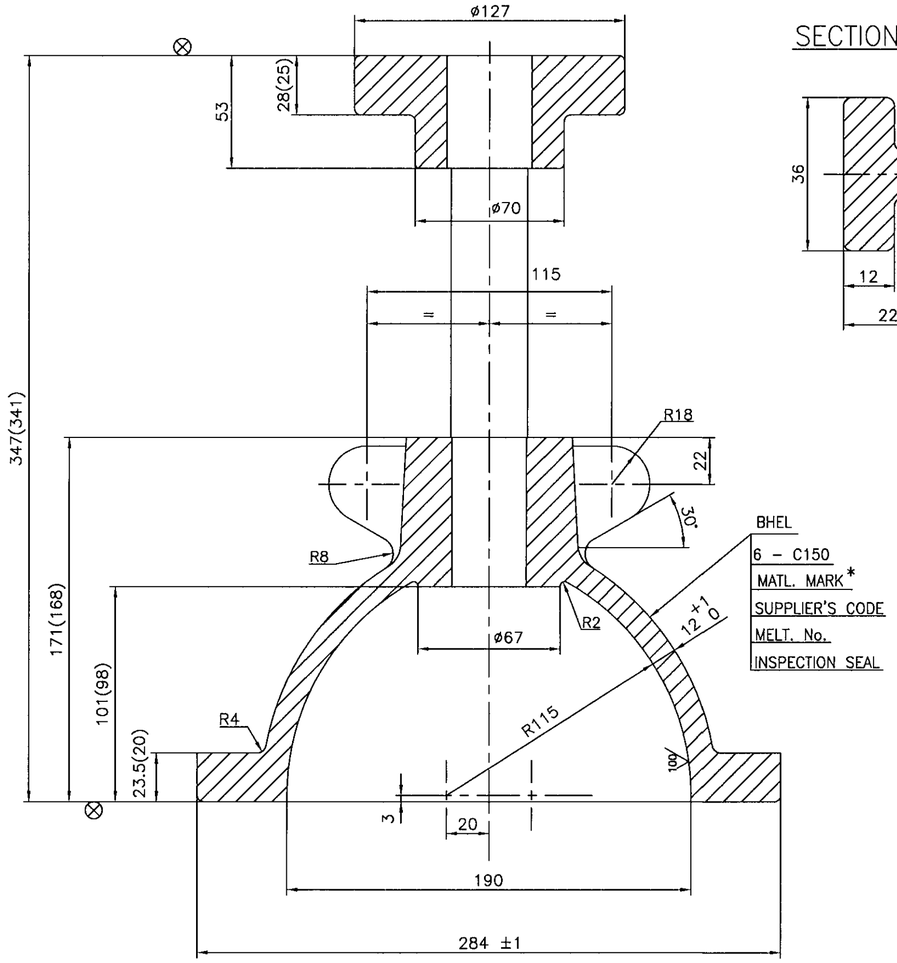

SECTION AA

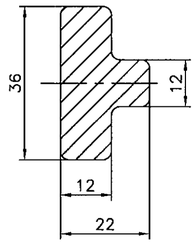

100

NOTE

01. NECESSARY MACHINING ALLOWANCES HAVE BEEN ADDED ON ALL MACHINABLE SURFACES.
02. PERMISSIBLE DEVIATIONS OF NON TOLERANCED CASTING DIMENSIONS REFER APPLICABLE TDC
03. FINISH MACHINED DIMENSIONS ARE INDICATED WITHIN BRACKETS FOR INFORMATION ONLY.
04. LETTERS– BHEL,SIZE,MATL.& SUPPLIERS CODE ARE TO BE CAST IN THE INDICATED ZONE.
05. CASTING SHALL COMPLY WITH THE REQUIREMENTS OF APPLICABLE TDC
06. UNSPECIFIED CASTING RADII = R3 TO R5
07. HEIGHT OF CASTING LETTERS = 15 mm
08. ⊗ INDICATES SURFACE TO BE MACHINED.
09. 100 INDICATED CASTING SURFACES SHALL BE OF HIGH QUALITY WITHOUT SURFACE UNEVENNESS.

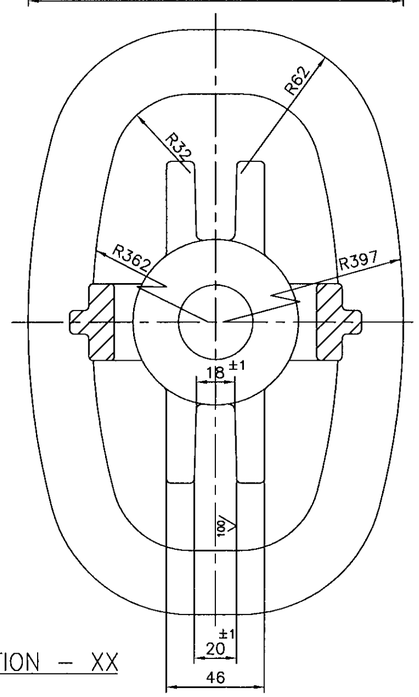

SECTION – XX

REV	DATE	ALTERED M.SRINIVASAN	REV	DATE	ALTERED M.SRINIVASAN
02	05.08.04	CHD & APPD K.S.RAMAN	01	15.03.04	CHD & APPD K.S.RAMAN
DCP:800351	DIMENSION 284±1 WAS 274±1		ZONE DCP:800297	DIMENSION 186 WAS 176 AND R397 WAS 392	

WCB	01	CASTING	92 201 428	ASTM A216 WCB–CERTIFY	NORMALISED	–	16.6	–	2.V.NC06.13611R/02	–
MATL. MARK *	No OFF	DESCRIPTION	MATL CODE	MATL SPECN	HEAT TREATMENT	SCRAP SORT	NET WT (kg)	GROSS WT (kg)	DRAWING No	ITEM No

TYPE OF PRODUCT
OR NAME OF
CUSTOMER/PROJECT

BHARAT HEAVY ELECTRICALS LTD.,
UNIT: HIGH PRESSURE BOILER PLANT.
TIRUCHIRAPALLI-620014.
365–120

	NAME	SIGN	DATE	NO.OF VAR.
DRN	M.SRINIVASAN		15.03.04	
CHD	P.BOOMINATHAN		15.03.04	
APPD	K.S.RAMAN		15.03.04	

DEPT V L | SCALE NTS | WEIGHT (KG). 16.6 | REFERENCE INFORMATIONS COMPONENT CODE:922014280000 CAD:C213611R | NO. OF ITEMS

CODE

TITLE: YOKE CUM BONNET | CARD CODE U 01 | DRAWING NO. 2–V–0000–13611R | REV 02

CAUTION: The information on this document is the property of BHARAT HEAVY ELECTRICALS LTD. It must not be used directly or indirectly in any way detrimental to the interest of the company.

Size A2

DRAWING NO. 2-V-0000-13685R

ALL DIMENSIONS ARE IN MILLIMETRES. FOR TOLERANCES OF UNTOLERANCED DIMENSIONS DURING MANUFACTURE REFER RELEVANT QCP / QP

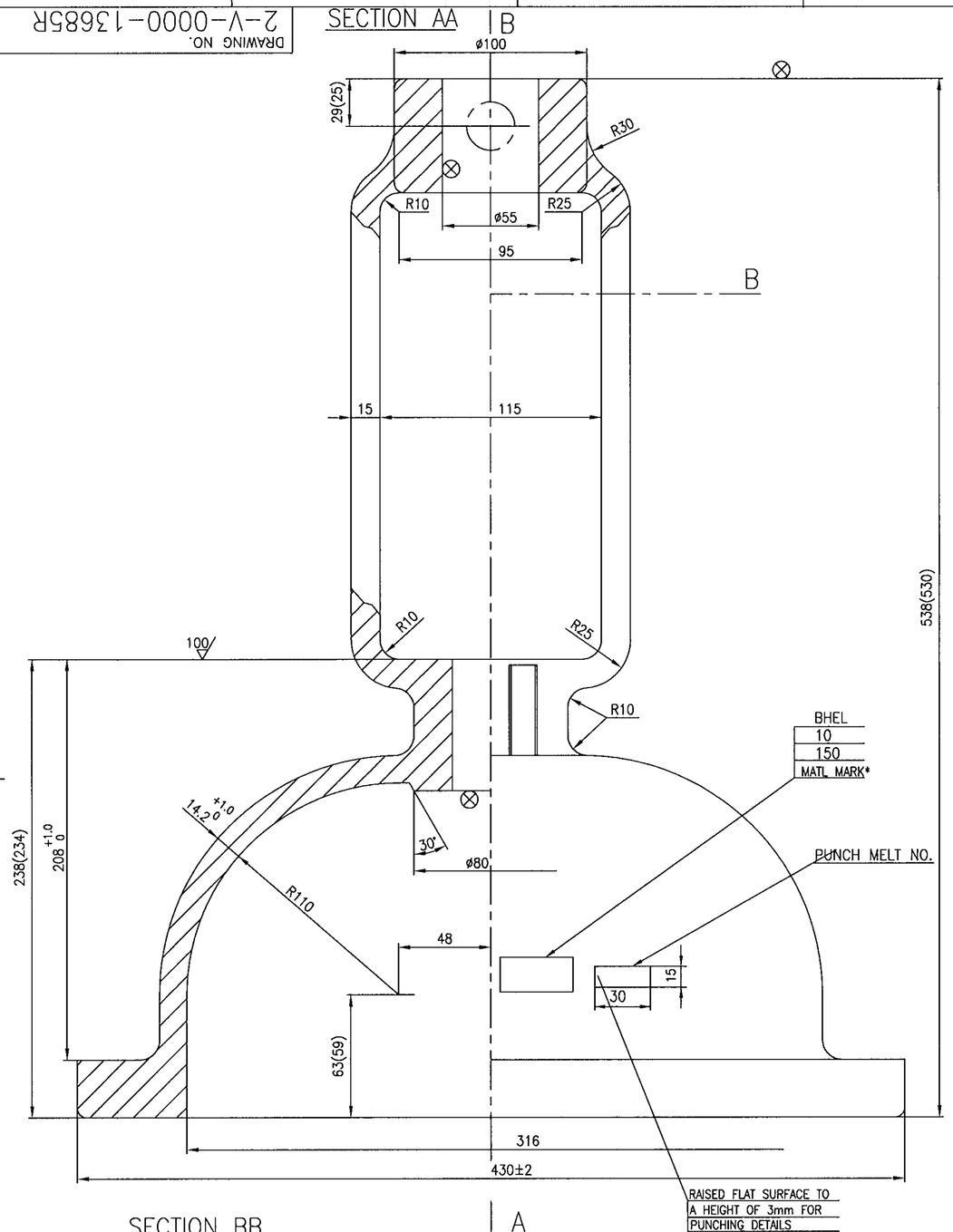

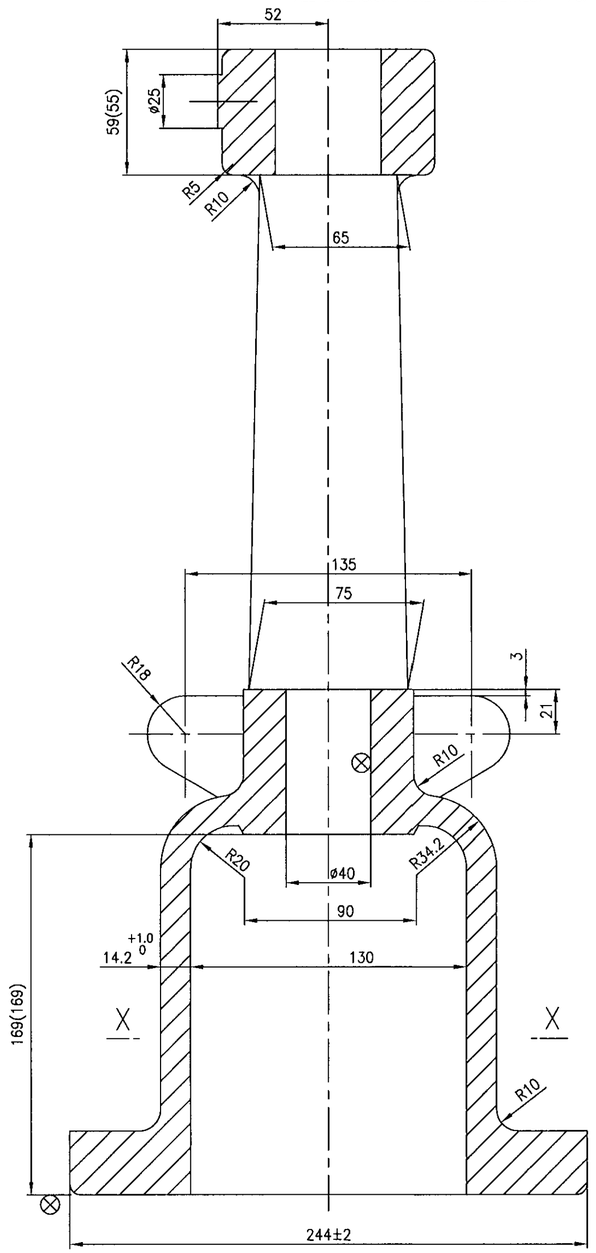

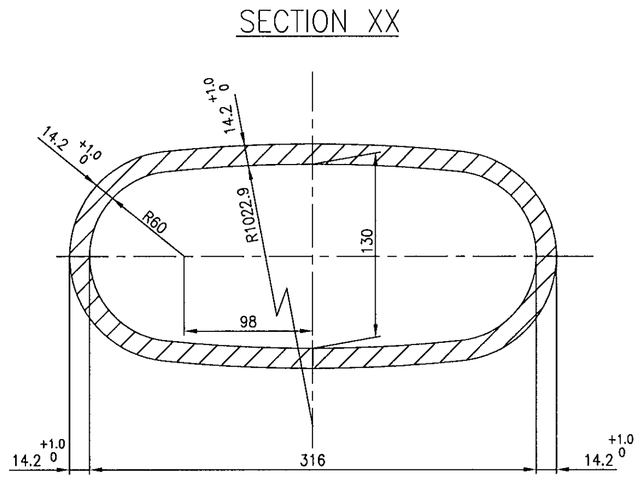

NOTES:

1. NECESSARY ALLOWANCES HAVE BEEN ADDED ON ALL MACHINABLE SURFACES.
2. FOR PERMISSIBLE DIMENSIONAL DEVIATIONS OF NON TOLERANCED LATEST DIMENSIONS REFER LATEST APPLICABLE QUALITY WORK INSTRUCTIONS
3. FINISH MACHINED DIMENSIONS ARE INDICATED WITHIN BRACKETS FOR INFORMATION ONLY.
4. 100 INDICATES THE CASTINGSURFACES MUST BE OF HIGH QUALITY WITHOUT SURFACE UNEVENNESS.
5. UNSPECIFIED CASTING RADIOUS R3 MAX..
6. ⊗ THIS MARK INDICATES THE SURFACES TO BE MACHINED.
7. HEIGHT OF CASTING LETTERS 20mm.
8. CASTING SHALL COMPLY WITH THE REQUIREMENTS OF LATEST APPLICABLE QUALITY WORK INSTRUCTIONS PROCEDURE IN ALL RESPECTS.

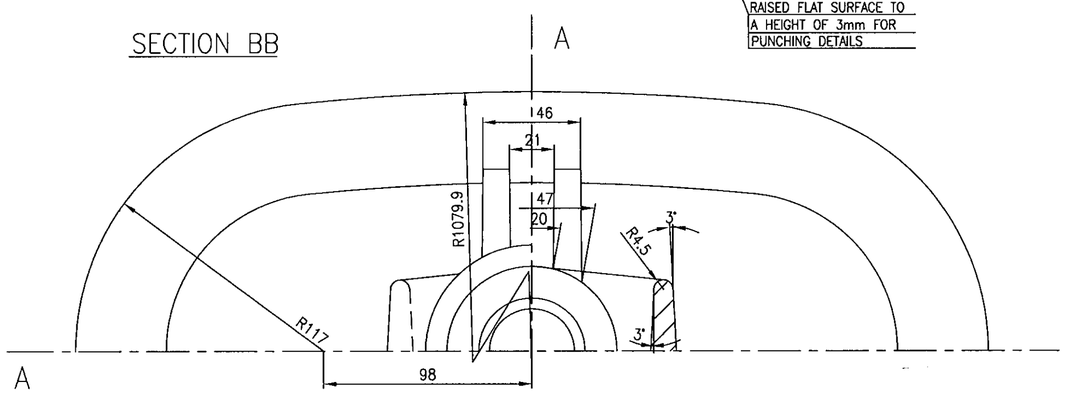

SL. No.	DRAWING No.	MATL. CODE	MATL. SPECN.	*MATL. MARK
01	2-V-NC10-13685R	922014740000	A216 WCB CERTIFY,NR	WCB

No OFF	DESCRIPTION	MATL CODE	MATL SPECN	HEAT TREATMENT	SCRAP SORT	NET WT (kg)	GROSS WT (kg)	DRAWING No	ITEM No

REV	DATE	ALTERED
		CHD & APPD
ZONE		

CAUTION: The information on this document is the property of BHARAT HEAVY ELECTRICALS LTD. It must not be used directly or indirectly in any way detrimental to the interest of the company.

TYPE OF PRODUCT
OR NAME OF
CUSTOMER/PROJECT

BHARAT HEAVY ELECTRICALS LTD.,
UNIT: HIGH PRESSURE BOILER PLANT.
TIRUCHIRAPALLI -620014.
365-120

	NAME	SIGN	DATE	NO.OF VAR.
DRN	V.BAIRAVAN			
CHD	R.L.NARAYANAN			
APPD	M.RAJAKUMAR			

DEPT VL
CODE 320
SCALE NTS
WEIGHT (KG). 40.0
REFERENCE INFORMATIONS
NO. OF ITEMS

TITLE
YOKE CUM BONNET
10"/150CL GV

CARD CODE U 01

DRAWING NO. 2-V-0000-13685R

REV

Size A2

FOR TOLERANCES OF UNTOLERANCED DIMENSIONS DURING MANUFACTURE REFER RELEVANT QCP/QP

SECTION_AA

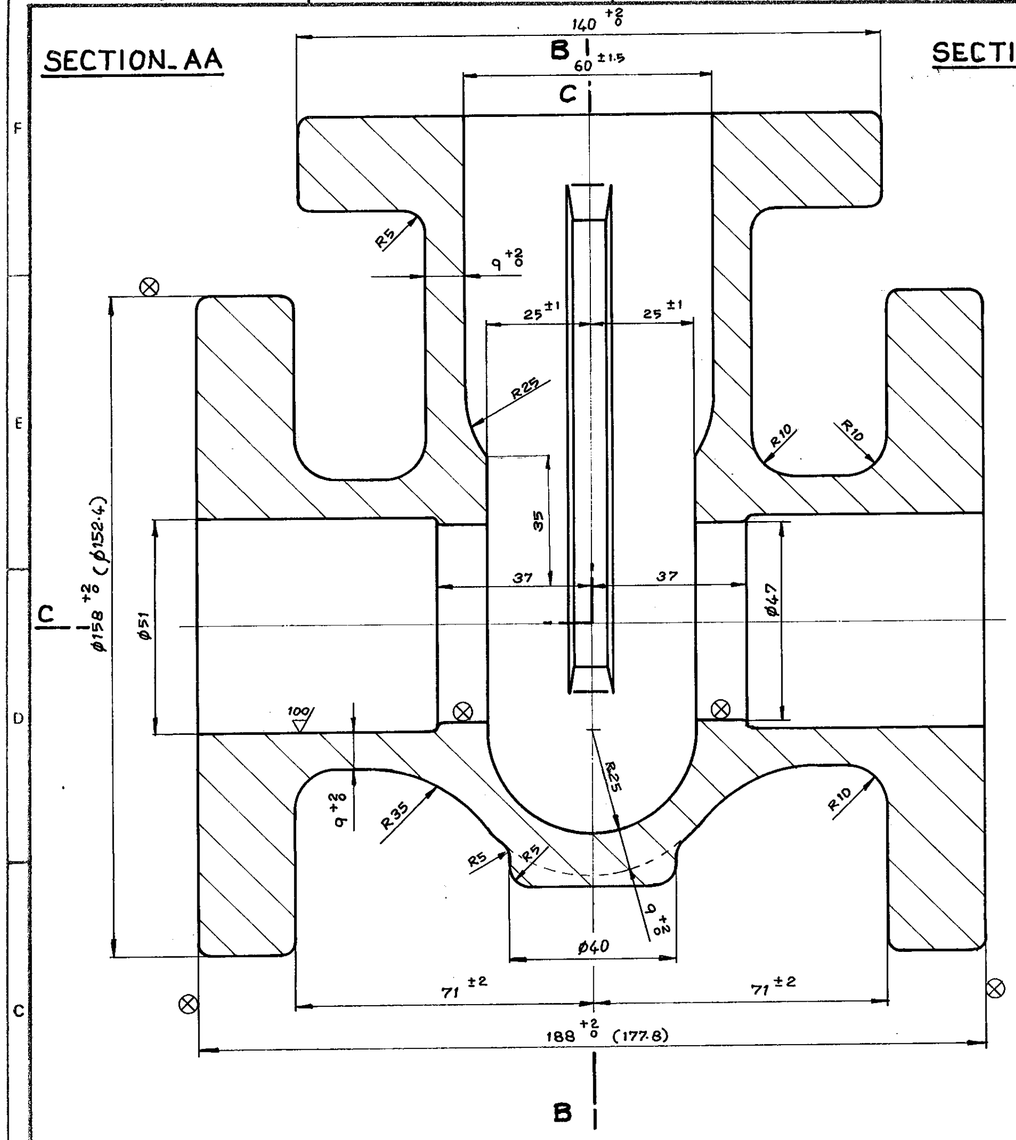

SECTION_BB

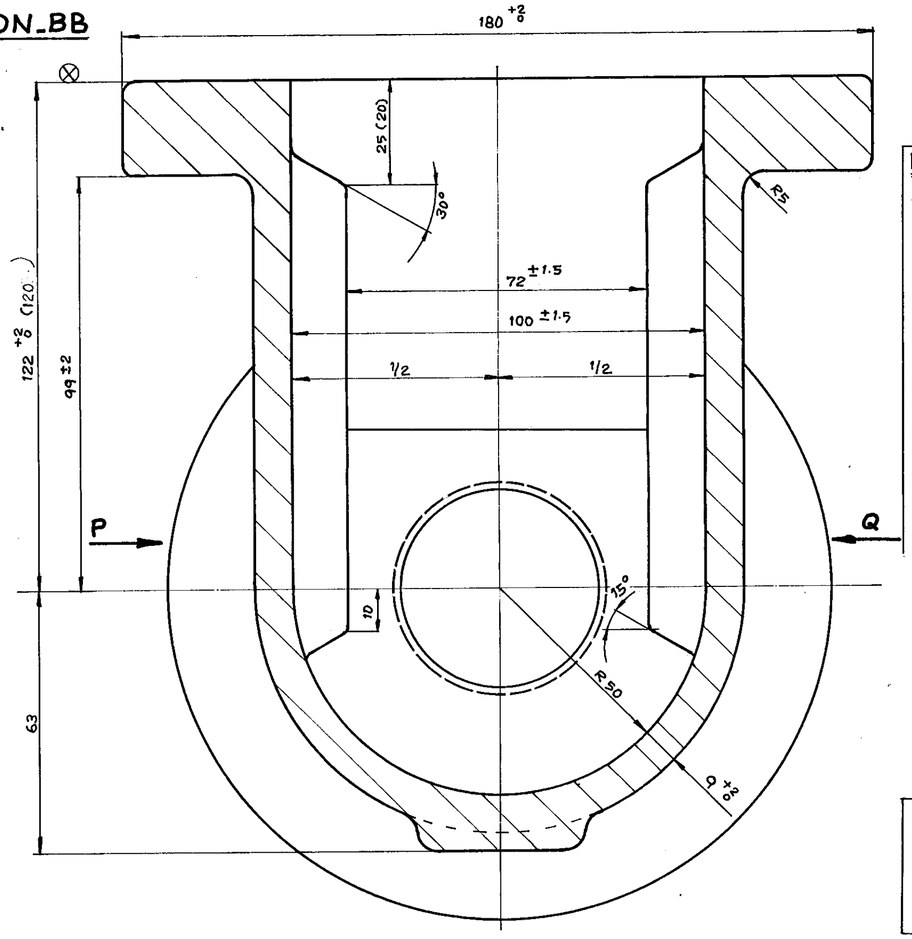

NOTES :-

01. NECESSARY MACHINING ALLOWANCES HAVE BEEN ADDED IN THIS DRG. ON MACHINABLE SURFACES.

02. UNSPECIFIED CASTING RADII R3-R5.

03. 100/ CASTING SURFACES MUST BE OF HIGH QUALITY WITHOUT SURFACE UNEVENNESS.

04. HEIGHT OF CASTING LETTERS 12MM.

05. ⊗ SURFACES TO BE MACHINED.

06. FINISH MACHINED DIMENSIONS ARE INDICATED WITHIN BRACKETS.

07. RISER REMAINS ARE TO BE REMOVED SUITABLY.

08. CASTING SHALL COMPLY WITH REQUIREMENTS OF APPLICABLE TDC

SPECIAL NOTE :

01. GUIDE RIB DIMENSIONS TO BE MAINTAINED WITHIN THE TOLERENCES INDICATED.

02. BOTH GUIDE RIBS TO BE COPLANAR AND TRUELY VERTICAL.

SECTION_CC

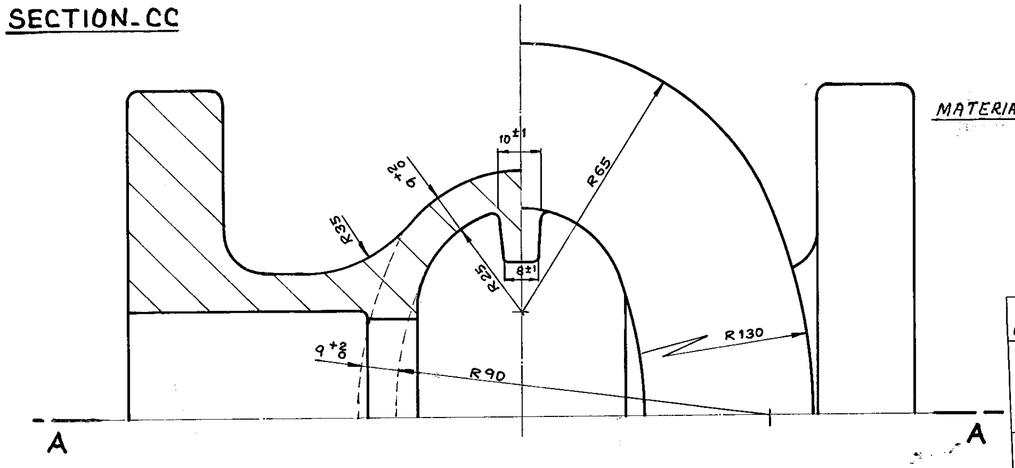

CAST IDENTIFICATION MARKING

VIEW_P

BHEL
2
150

VIEW_Q

SUPPLIER'S CODE
MELT No.
INSPECTION SEAL
MATERIAL MARK

SL NO.	MATL. CODE / CASTING DRG. NO	MATL. SPECN.	MATL MARK TO BE CAST.	TYPE NO.
01.	92027056 / 2_V_N073_03401R/03	ASTM A216 WCB NORMALISED	A216 WCB	N073

BHARAT HEAVY ELECTRICALS LTD.,
BOILER PLANT UNIT, TIRUCHIRAPALLI-14

FIRST ANGLE	SCALE N.T.S	DRAWN: PRABAKAR	TOTAL NET WT.(KG) 14.1
		CHECKED: J.D.PAL	TYPE
		APPROVED: S.KUMAR	
ALL DIMENSIONS IN MILLIMETRES		DATE 03.11.89	NEW/OLD DRG. NO.

TITLE: BODY 50_150 CLASS

DRAWING NO. 2_V_N073-03401R

REVISION 03

CAUTION

THE INFORMATION CONTAINED IN THIS DRAWING IS THE PROPERTY OF BHARAT HEAVY ELECTRICALS LTD., BOILER PLANT UNIT, TIRUCHY-14 AND SHALL NOT BE USED WITHOUT THEIR EXPRESS WRITTEN PERMISSION IN ANY FORM OR PART THEREOF FOR ANY OTHER PURPOSE THAN FOR WHICH IT IS SENT TO YOU.

33-114

REV.	DATE	ALTD:- / CHD&APPD:-
04		

REV.	DATE	ALTD: T.C. / CHD&APPD
03	28.2.97	

NOTES UPDATED
REFER DCN.CS:0662

REV.	DATE	ALTD:-T.C. / CHD&APPD:-
02	08.05.96	

HYD. TEST PR. NOTE DELETED.
REFER DCN. CS0579

REV.	DATE	ALTERED (LRB) / CHECKED
01	2.9.94	

ZONE
1) NOTE No. 10 MODIFIED.
2) NOTE No. 11. ADDED.
3) DCN. NO. CS: 0392

TP-DG-2-V-N826-08121R
CORPORATE DRG ID

DRAWING NO 2-V-N826-08121R

ALL DIMENSIONS ARE IN MILLIMETRES. FOR TOLERANCES OF UNTOLERANCED DIMENSIONS DURING MANUFACTURE REFER RELEVANT QCP / QP

SECTION BB

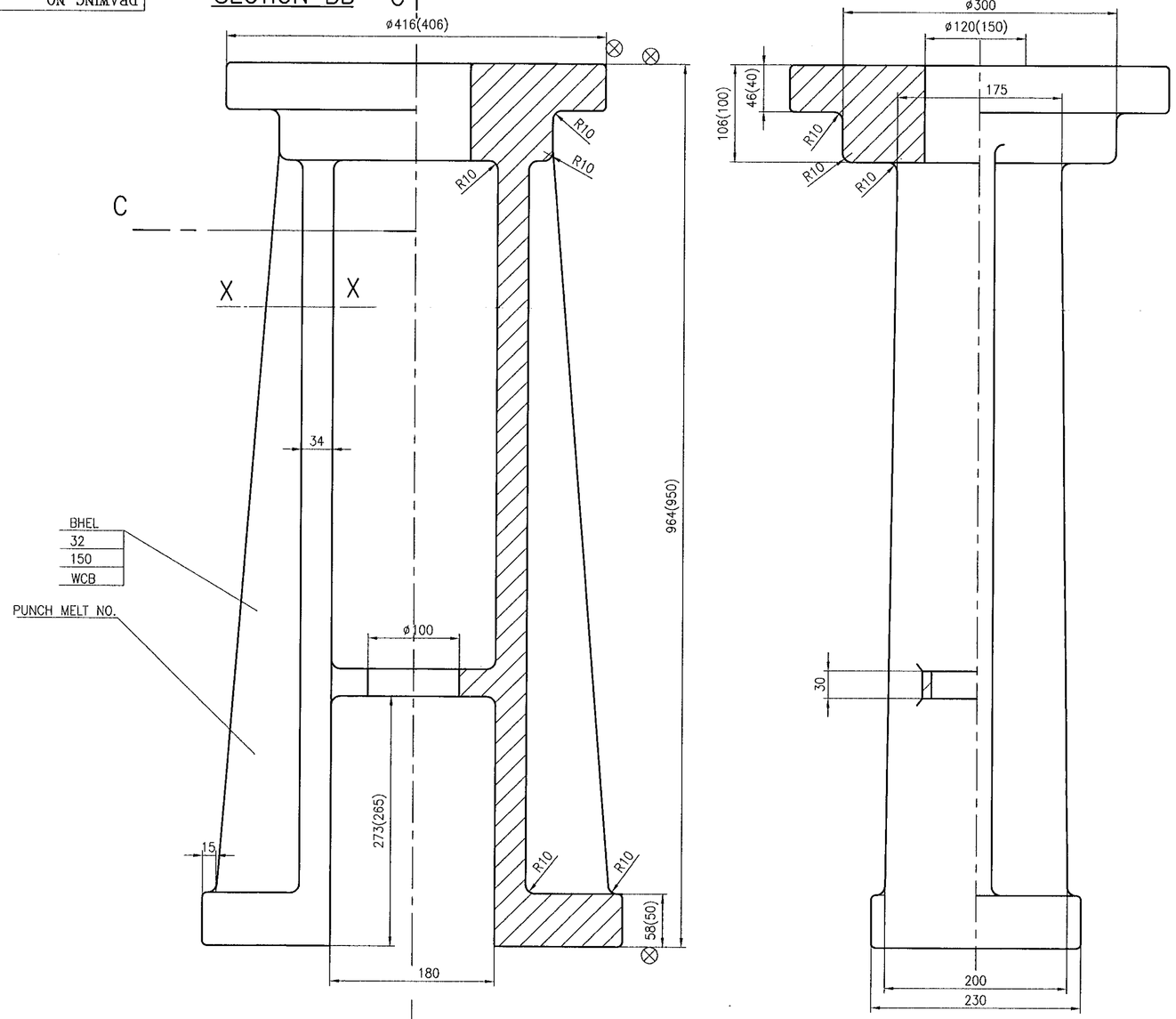

SECTION XX

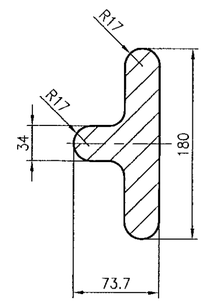

SECTION CC

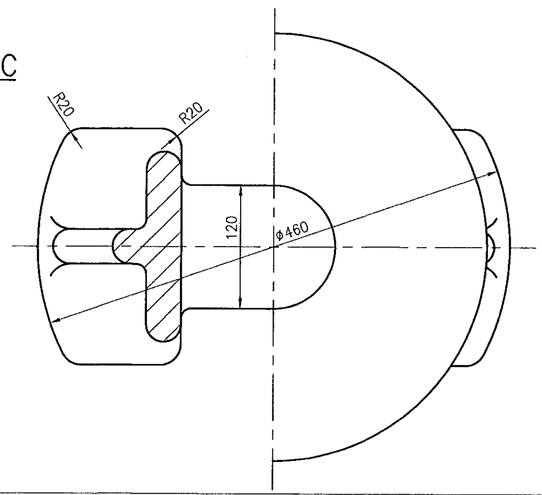

NOTES:

1. CASTING SHALL COMPLY WITH THE REQUIREMENT OF LATEST APPLICABLE QUALITY PROCEDURE IN ALL RESPECTS.
2. NECESSARY ALLOWANCES HAVE BEEN ADDED ON ALL MACHINABLE SURFACES.
3. PERMISSIBLE DIMENSIONAL DEVIATIONS OF CASTING SURFACES REFER LATEST APPLICABLE QUALITY PROCEDURE
4. FINISH MACHINED DIMENSIONS ARE INDICATED WITHIN BRACKETS FOR REFERENCE ONLY.
5. UNSPECIFIED CASTING RADII 3–5mm.
6. ⊗ SURFACE TO BE MACHINED.
7. HEIGHT OF CASTING LETTERS 20mm.

No OFF	DESCRIPTION	MATL CODE	MATL SPECN	HEAT TREATMENT	SCRAP SORT	NET WT (kg)	GROSS WT (kg)	DRAWING No	ITEM No
		922011790000	A216 WCB / CERTIFY	NR			200		

TYPE OF PRODUCT
OR NAME OF
CUSTOMER/PROJECT

BHARAT HEAVY ELECTRICALS LTD.,
UNIT: HIGH PRESSURE BOILER PLANT.
TIRUCHIRAPALLI-620014.
365-120

	NAME	SIGN	DATE	NO.OF VAR.
DRN	V.BAIRAVAN		2.9.99	
CHD	R.L.NARAYANAN		4.9.99	
APPD	M.RAJAKUMAR		4/9/99	

REV	DATE	ALTERED
		CHD & APPD

ZONE

DEPT V L
CODE 320
SCALE N T S
WEIGHT (KG). 200.0
REFERENCE INFORMATIONS
NO. OF ITEMS

TITLE: YOKE 32"/150C GV
CARD CODE U 01
DRAWING NO. 2-V-N826-08121R
REV

Size A2

CAUTION: The information on this document is the property of BHARAT HEAVY ELECTRICALS LTD. It must not be used directly or indirectly in any way detrimental to the interest of the company.

TP-DG-2-V-N826-08121R
CORPORATE DRG ID

ALL DIMENSIONS ARE IN MILLIMETRES. FOR TOLERANCES OF UNTOLERANCED DIMENSIONS DURING MANUFACTURE REFER RELEVANT QCP / QP.

DRAWING NO. 3-V-0000-02953R

SL. NO.	CASTING DRG. NO.	COMP.CODE	MATL. SPECN.		ØD	ØD2	H	NET Wt.	APPLICABLE VALVE	REMARKS
01	3-V-2478-02953R/03	92 001 091	A217 CA15		105	60	45	1.92	3"-C300-SV	
02	3-V-2479-02953R/03	92 001 092	A217 CA15		140	70	42	3.8	4"-C300-SV	
03	3-V-2480-02953R/03	92 001 098	A217 CA15		184	130	50	5.2	6"-C300-SV	
04	3-V-2481-02953R/03	92 001 099	A217 CA15		240	175	52	8.6	8"-C300-SV	
05	3-V-N672-02953R	92 001 521	A351-CF8		66	45	280	5.1	2"-C150/ C300-GV	NOTE 1
06	3-V-Z004-02953R	92 001 522	A351-CF8		82	46	260	9.5	2"-C150-FV	NOTE 1
07	3-V-Z037-02953R	92 001 523	A351-CF8	CERTIFY	106	70	24	1.2	3"-C150-FV	
08	3-V-P394-02953R	92 001 524	A351-CF8		105	60	45	3.1	3"-C300-RV	
09	3-V-Z051-02953R	92 201 584	A351-CF8M		106	70	24	1.2	3"-C150-FV	
10	3-V-Z011-02953R	92 201 585	A351-CF8M		136	95	27	1.5	4"-C150-FV	
11	3-V-Z057-02953R	92 201 586	A351-CF8M		82	46	260	9.5	2"-C150-FV	NOTE 1
12	3-V-P361-02953R	92 201 587	A351-CF8M		105	60	45	3.1	3"-C300-RV	
13	3-V-P408-02953R	92 201 588	A351-CF8M		140	70	42	3.8	4"-C300-RV	
14	3-V-P439-02953R	92 201 589	A351-CF8M		184	130	50	5.2	6"-C300-RV	
15	3-V-P462-02953R	92 201 590	A351-CF8M		240	175	52	8.6	8"-C300-RV	
16	3-V-P366-02953R/01	92 201 615	A217 CA15		270	192	48	10.6	10"-C300-RV	
17	3-V-Z033-02953R	92 201 673	A351-CF8		136	95	27	1.5	4"-C150-FV	

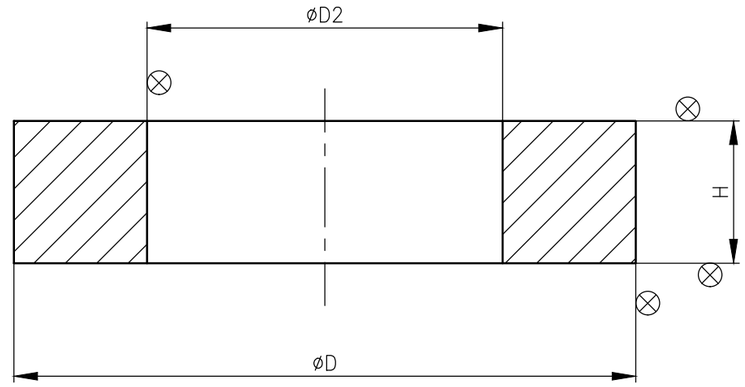

NOTES:-

1. TEN NOS ARE TO BE MADE FROM A SINGLE CASTING.
2. CASTING SHALL BE SUPPLIED WITH THE HARDENED & TEMPERED CONDITION, WITH A MIN. HARDNESS LEVEL OF 250 BHN & 280 BHN. MAX
3. NECESSARY MACHINING ALLOWANCES HAVE BEEN ADDED IN THIS DRG. ON ALL SURFACES TO BE MACHINED.
4. CASTING SHALL COMPLY REQUIREMENTS OF LATEST APPLICABLE QUALITY PROCEDURE.
5. ⊗ – INDICATES THE SURFACES WHICH ARE TO BE MACHINED FURTHER.
6. PUNCH TYPE NO * & SUPPLIER'S CODE.
   MATL. SPECN.
   MELT NO.

NO OFF	DESCRIPTION	MATL CODE	MATL SPECN	HEAT TREATMENT	SCRAP SORT	NET WT (kg)	GROSS WT (kg)	DRAWING No	ITEM No
–	–	–	–	–	–	–	–	–	–

TYPE OF PRODUCT OR NAME OF CUSTOMER/PROJECT: CS

DRG. REDRAWN WITH REV.06 ON 29.06.2007

BHARAT HEAVY ELECTRICALS LTD.
UNIT: HIGH PRESSURE BOILER PLANT.
TIRUCHIRAPALLI 620014.
365-121

	NAME	SIGN	DATE	NO.OF VAR.
DRN	A.S.PANDY		29.06.07	
CHD	T.R.RAMAMURTHY		29.06.07	
APPD	P.BOOMINATHAN		29.06.07	

DEPT VL
CODE 320
SCALE NTS
WEIGHT (KG). –
REFERENCE INFORMATIONS: CAD:C302953R
NO. OF ITEMS

TITLE: SEAT RING
CARD CODE: U 01
DRAWING NO. 3-V-0000-02953R
REV 07

REV	DATE	ALTERED		REV	DATE	ALTERED	
07	12.09.15	M.SELVAM	CHD & APPD MS & SSK	06	29.06.07	CHD & APPD	T.R.R.MURTHY P.B.NATHAN
		MATERIAL A217 CA15 WAS A351 CA15 DCP:801998				SL. No.17 INCLUDED	

CAUTION: The information on this document is the property of BHARAT HEAVY ELECTRICALS LTD. It must not be used directly or indirectly in any way detrimental to the interest of the company.

Size A3

ALL DIMENSIONS ARE IN MILLIMETRES. FOR TOLERANCES OF UNTOLERANCED DIMENSIONS DURING MANUFACTURE REFER RELEVANT QCP / QP.

DRAWING NO. 3-V-0000-06599R

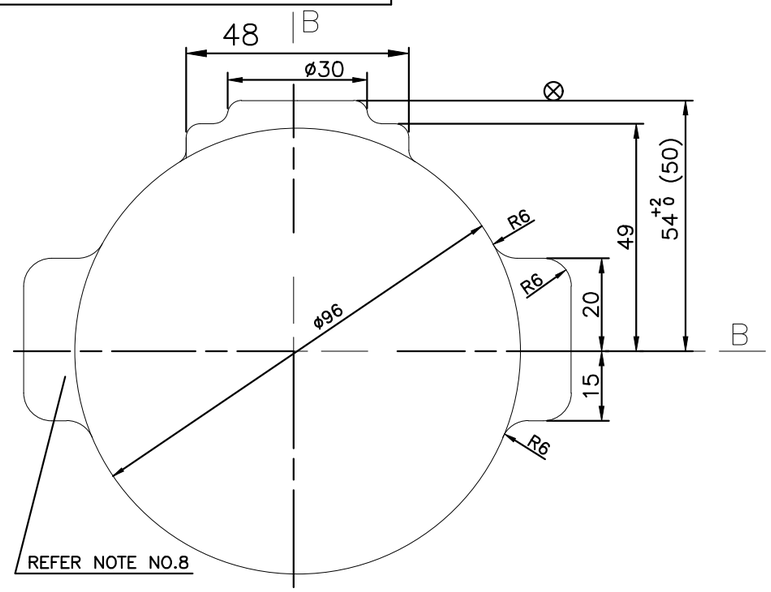

SECTION-AA

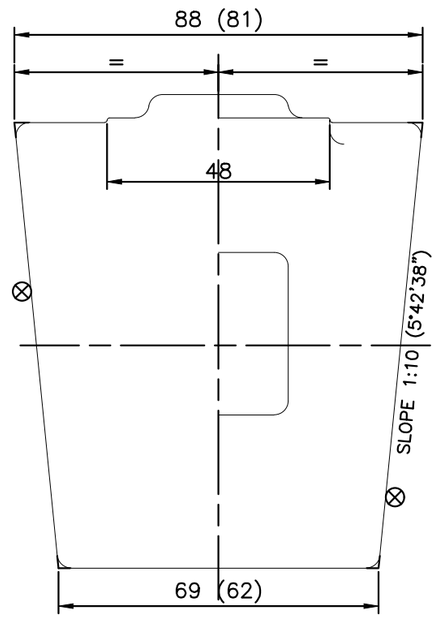

SECTION-BB

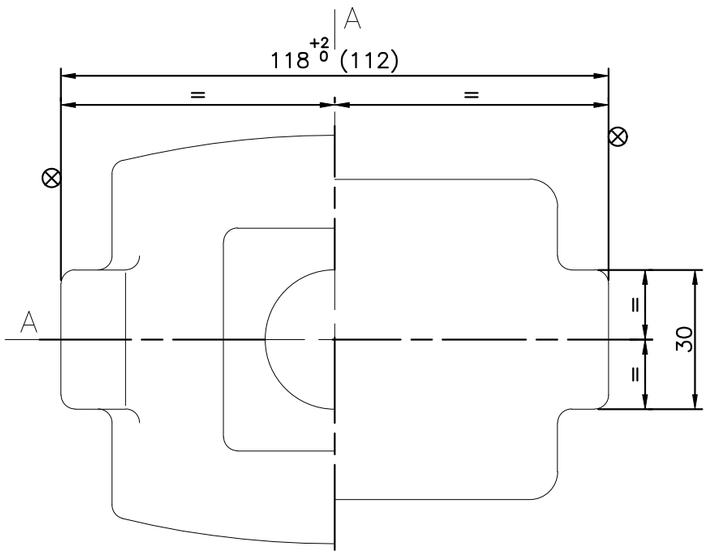

NOTES:-

1. NECESSARY MACHINING ALLOWANCES HAVE BEEN ADDED ON ALL MACHINABLE SURFACES
2. ⊗ SURFACES TO BE MACHINED
3. UNSPECIFIED CASTING RADII R3-R5
4. 100/▽ CASTING SURFACES MUST BE HIGH QUALITY WITHOUT SURFACE UNEVENNESS
5. PERMISSIBLE DIMENSIONAL DEVIATION OF CASTING SURFACES REFER CHART
6. FINISH MACHINED DIMENSIONS ARE INDICATED WITHIN BRACKETS
7. CASTING SHALL MEET THE REQUIREMENTS OF TDC (WITH LATEST REVISION)
8. THE FOLLOWING IDENTIFICATION MARKING TO BE PUNCHED IN THE ZONE SPECIFIED IN THE DRG.
   3"-300C
   MATL. MARK
   SUPPLIERS CODE
   MELT NO.
9. # MARKED ITEMS IGC TEST SHALL BE CONDUCTED.

SL No.	DRAWING NO.	MATL CODE	MATL SPECN	HEAT TREATMENT	SCRAP SORT	NET WT (kg)	GROSS WT (kg)	MATL.MARK	ITEM No
# 07	3.V.U637.06599R/00	92 203 551	A351 CF8 CERTIFY	SH	--	4.6	--	CF8	--
06	3.V.N258.06599R/01	92 200 481	A217 WC9 CERTIFY	N & T	--	4.6	--	WC9	--
05	3.V.N257.06599R/01	92 200 480	A217 WC6 CERTIFY	N & T	--	4.6	--	WC6	--
04	3.V.N256.06599R/01	92 200 479	A216 WCC CERTIFY	NR	--	4.6	--	WCC	--
03	3.V.N373.06599R/00	92 200 478	A351 CF8M CERTIFY	SH	--	4.6	--	CF8M	--
02	3.V.N364.06599R/00	92 200 438	A351 CF8 CERTIFY	SH	--	4.6	--	CF8	--
01	3.V.N049.06599R/00	92 034 284	A216 WCB CERTIFY	NR	--	4.6	--	A216 WCB	--

REV	DATE	ALTERED R.P.SINGH
04	10.04.18	CHD & APPD SSK & KRS

SL.NO.07 INCLUDED

CAUTION: The information on this document is the property of BHARAT HEAVY ELECTRICALS LTD. It must not be used directly or indirectly in any way detrimental to the interest of the company.

TYPE OF PRODUCT OR NAME OF CUSTOMER/PROJECT: CS

DRG REDRAWN WITH REV.04 ON.10.04.18

BHARAT HEAVY ELECTRICALS LTD.
UNIT: HIGH PRESSURE BOILER PLANT.
TIRUCHIRAPALLI 620014.
365-121

	NAME	SIGN	DATE	NO.OF VAR.
DRN	T.R.RAMAMURTHY		12.06.89	
CHD	N.DHANAPAL		12.06.89	
APPD	S.KUMAR		12.06.89	

DEPT	SCALE	WEIGHT (KG).	REFERENCE INFORMATIONS	NO. OF ITEMS
VL	NTS.	4.6	CAD.REF.C306599R	
CODE 320				

TITLE	CARD CODE	DRAWING NO.	REV
WEDGE (3"-300C)	U 01	3-V-0000-06599R	04

Size A3

ALL DIMENSIONS ARE IN MILLIMETRES. FOR TOLERANCES OF UNTOLERANCED DIMENSIONS DURING MANUFACTURE REFER RELEVANT QCP / QP.

DRAWING NO. 3-V-0000-24641R

SL.No.	DRAWING No.	MATL.SPECN.	MATL.CODE.	WT. (kg)	MATL.MARK TO BE PUNCHED *	SCRAP SORT	DIMENSIONS ØD	L	L1	R	APPLICABLE VALVES
01	3-V-5158-24641R	A216-WCB NORMALISED ATTEST	92 201 739	8.10	WCB	10	214	54	28	15	2"-150C FV
02	3-V-5157-24641R		92 201 738	12.2	WCB	10	264	54	28	15	3"-150C FV
03	3-V-5156-24641R		92 201 737	15.5	WCB	10	298	54	28	15	4"-150C FV
04	3-V-5151-24641R		92 201 741	33.0	WCB	10	374	68	38	15	6"-150C & 300C FV
05	3-V-5154-24641R		92 201 736	48.0	WCB	10	440	69	40	15	8"-150C FV
06	3-V-5153-24641R		92 201 735	14.7	WCB	10	256	62	36	15	2"-300C FV
07	3-V-5152-24641R		92 201 740	17.0	WCB	10	276	62	36	15	3"-300C FV
08	3-V-5144-24641R		92 201 734	20.0	WCB	10	298	62	36	15	4"-300C FV
09	3-V-5150-24641R		92 201 742	54.8	WCB	10	444	73	45	15	8"-300C FV

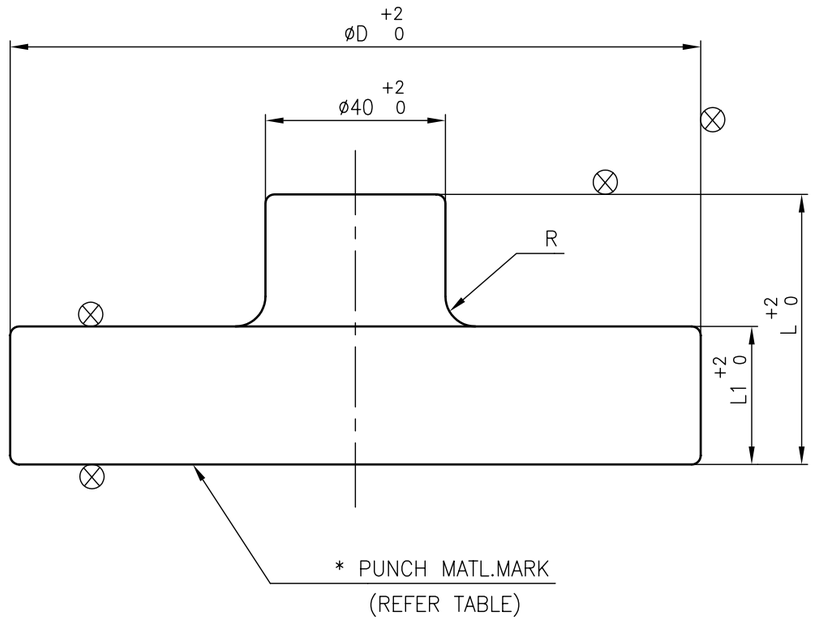

NOTES:-

1. UNSPECIFIEDCASTING RADII-R3
2. ⊗ INDICATES THE SURFACES WHICH ARE TO BE MACHINED FURTHER.
3. CASTING SHALL COMPLY WITH REQUIRMENT OF LATEST APPLICABLE TDC.

NO OFF	DESCRIPTION	MATL CODE	MATL SPECN	HEAT TREATMENT	SCRAP SORT	NET WT (kg)	GROSS WT (kg)	DRAWING No	ITEM No

TYPE OF PRODUCT OR NAME OF CUSTOMER/PROJECT: CS

BHARAT HEAVY ELECTRICALS LTD.
UNIT: HIGH PRESSURE BOILER PLANT.
TIRUCHIRAPALLI - 620014.
365-121

	NAME	SIGN	DATE	NO.OF VAR.
DRN	T.R.RAMAMURHY		22.12.07	
CHD	T.R.RAMAMURHY		22.12.07	
APPD	P.BOOMINATHAN		22.12.07	

DEPT VL
CODE 320
SCALE N T S
WEIGHT (KG). REFER TABLE
REFERENCE INFORMATIONS CAD: C324641R
NO. OF ITEMS

TITLE: COVER (CASTING)
CARD CODE U 01
DRAWING NO. 3-V-0000-24641R
REV 00

REV	DATE	ALTERED
		CHD & APPD

CAUTION: The information on this document is the property of BHARAT HEAVY ELECTRICALS LTD. It must not be used directly or indirectly in any way detrimental to the interest of the company.

Size A3

ALL DIMENSIONS ARE IN MILLIMETRES. FOR TOLERANCES OF UNTOLERANCED DIMENSIONS DURING MANUFACTURE REFER RELEVANT QCP / QP.

DRAWING NO. 3-V-0000-24641R

SL.No.	DRAWING No.	MATL.SPECN.	MATL.CODE.	WT. (kg)	MATL.MARK TO BE PUNCHED *	SCRAP SORT	DIMENSIONS ØD	L	L1	R	APPLICABLE VALVES
01	3-V-5158-24641R	A216-WCB NORMALISED ATTEST	92 201 739	8.10	WCB	10	214	54	28	15	2"-150C FV
02	3-V-5157-24641R		92 201 738	12.2	WCB	10	264	54	28	15	3"-150C FV
03	3-V-5156-24641R		92 201 737	15.5	WCB	10	298	54	28	15	4"-150C FV
04	3-V-5151-24641R		92 201 741	33.0	WCB	10	374	68	38	15	6"-150C & 300C FV
05	3-V-5154-24641R		92 201 736	48.0	WCB	10	440	69	40	15	8"-150C FV
06	3-V-5153-24641R		92 201 735	14.7	WCB	10	256	62	36	15	2"-300C FV
07	3-V-5152-24641R		92 201 740	17.0	WCB	10	276	62	36	15	3"-300C FV
08	3-V-5144-24641R		92 201 734	20.0	WCB	10	298	62	36	15	4"-300C FV
09	3-V-5150-24641R		92 201 742	54.8	WCB	10	444	73	45	15	8"-300C FV

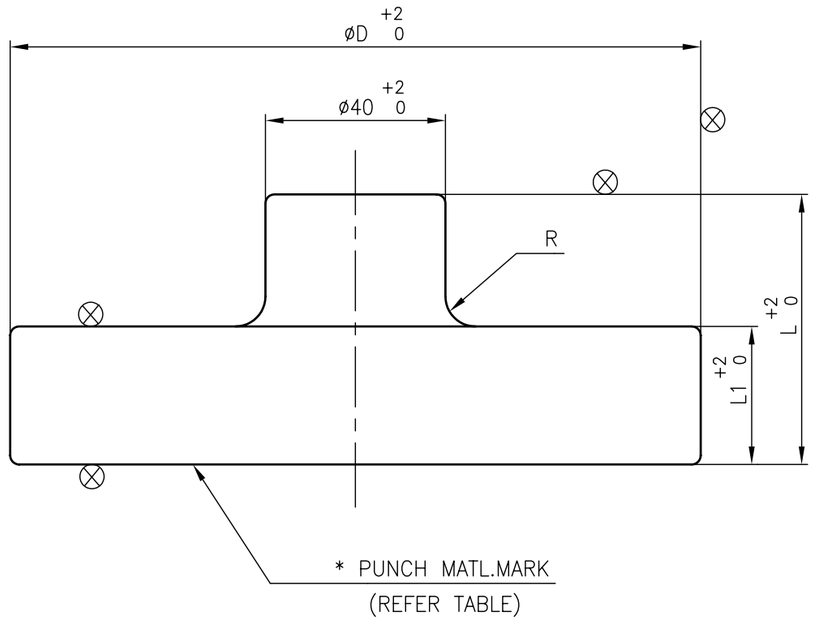

NOTES:-

1. UNSPECIFIEDCASTING RADII-R3
2. ⊗ INDICATES THE SURFACES WHICH ARE TO BE MACHINED FURTHER.
3. CASTING SHALL COMPLY WITH REQUIRMENT OF LATEST APPLICABLE TDC.

NO OFF	DESCRIPTION	MATL CODE	MATL SPECN	HEAT TREATMENT	SCRAP SORT	NET WT (kg)	GROSS WT (kg)	DRAWING No	ITEM No

TYPE OF PRODUCT OR NAME OF CUSTOMER/PROJECT: CS

BHARAT HEAVY ELECTRICALS LTD.
UNIT: HIGH PRESSURE BOILER PLANT.
TIRUCHIRAPALLI - 620014.
365-121

	NAME	SIGN	DATE	NO.OF VAR.
DRN	T.R.RAMAMURHY		22.12.07	
CHD	T.R.RAMAMURHY		22.12.07	
APPD	P.BOOMINATHAN		22.12.07	

DEPT VL
CODE 320
SCALE N T S
WEIGHT (KG). REFER TABLE
REFERENCE INFORMATIONS CAD: C324641R
NO. OF ITEMS

TITLE: COVER (CASTING)
CARD CODE U 01
DRAWING NO. 3-V-0000-24641R
REV 00

REV	DATE	ALTERED
		CHD & APPD

CAUTION: The information on this document is the property of BHARAT HEAVY ELECTRICALS LTD. It must not be used directly or indirectly in any way detrimental to the interest of the company.

Size A3

ALL DIMENSIONS ARE IN MILLIMETRES. FOR TOLERANCES OF UNTOLERANCED DIMENSIONS DURING MANUFACTURE REFER RELEVANT QCP / QP.

DRAWING NO. 3-V-0000-25332R

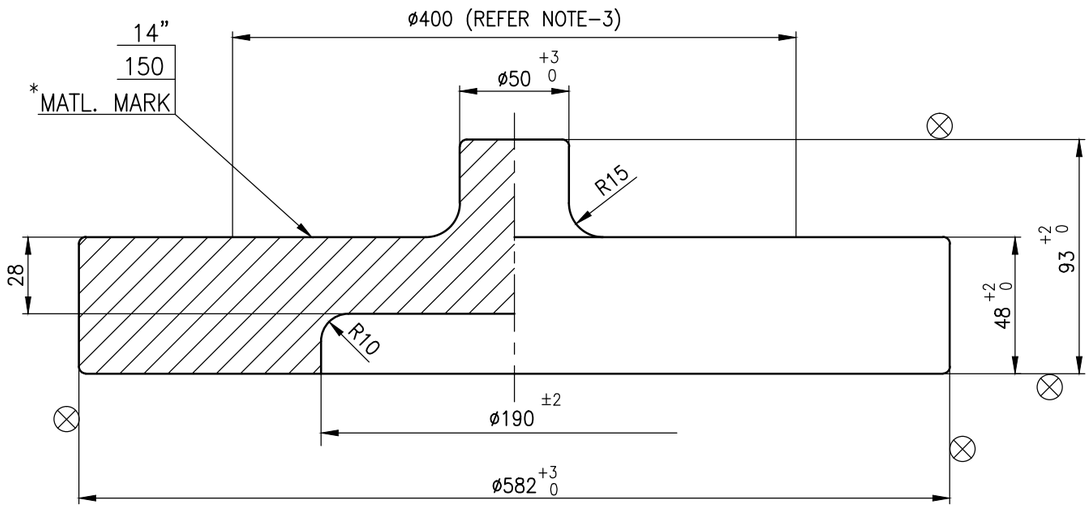

NOTES:-

1 . NECESSARY MACHINING ALLOWANCES HAVE BEEN ADDED ON ALL MACHINABLE SURFACES
2 . PERMISIBLE DIMENSIONAL DEVIATIONS OF NON TOLERANCED CASTING DIMENSIONS – REFER LATEST APPLICABLE QUALITY WORK INSTRUCTION.
3 . ALL CAST LETTERS, MELT. No. & INSPECTION SEAL SHALL BE MADE WITHIN THE CIRCLE ø400 AS SHOWN.
4 . CASTING SHALL COMPLY WITH THE REQUIREMENTS OF LATEST APPLICABLE QUALITY WORK INSTRUCTIONS.
5 . UNSPECIFIED CASTING RADII 3 – 5 MM
6 . HEIGHT OF CASTING LETTERS 15MM
7. ⊗ SURFACE TO BE FURTHER MACHINED.

SL. NO.	DRAWING NO.	MATL. SPECN.		MATL. CODE	*MATL. MARK	
03	3-V-Z084-25332R	CI,IS-210,GrFG260, AN	ATTEST	922032240000	CI	
02	3-V-Z083-25332R	SA217 WC9, NT		922032230000	WC9	
01	3-V-Z082-25332R	SA216 WCB, NR		922032220000	WCB	

NO OFF	DESCRIPTION	MATL CODE	MATL SPECN	HEAT TREATMENT	SCRAP SORT	NET WT (kg)	GROSS WT (kg)	DRAWING No	ITEM No

TYPE OF PRODUCT
OR NAME OF
CUSTOMER/PROJECT

BHARAT HEAVY ELECTRICALS LTD.,
UNIT: HIGH PRESSURE BOILER PLANT.
TIRUCHIRAPALLI-620014.
365-121

	NAME	SIGN	DATE	NO.OF VAR.
DRN	V.BAIRAVAN		11.02.14	
CHD	S.SATHEES		11.02.14	
APPD	K.RAJASEKARAN		11.02.14	

DEPT	SCALE	WEIGHT (KG).	REFERENCE INFORMATIONS	NO. OF ITEMS
VL	N T S	96.5		
CODE 320				

TITLE: COVER
CASTING 14"/150CLASS

CARD CODE: U 01

DRAWING NO. 3-V-0000-25332R (REFER TABLE)

REV

REV	DATE	ALTERED
		CHD & APPD

CAUTION: The information on this document is the property of BHARAT HEAVY ELECTRICALS LTD. It must not be used directly or indirectly in any way detrimental to the interest of the company.

Size A3

ALL DIMENSIONS ARE IN MILLIMETRES. FOR TOLERANCES OF UNTOLERANCED DIMENSIONS DURING MANUFACTURE REFER RELEVANT QCP / QP.

DRAWING NO. 3-V-0000-25336R

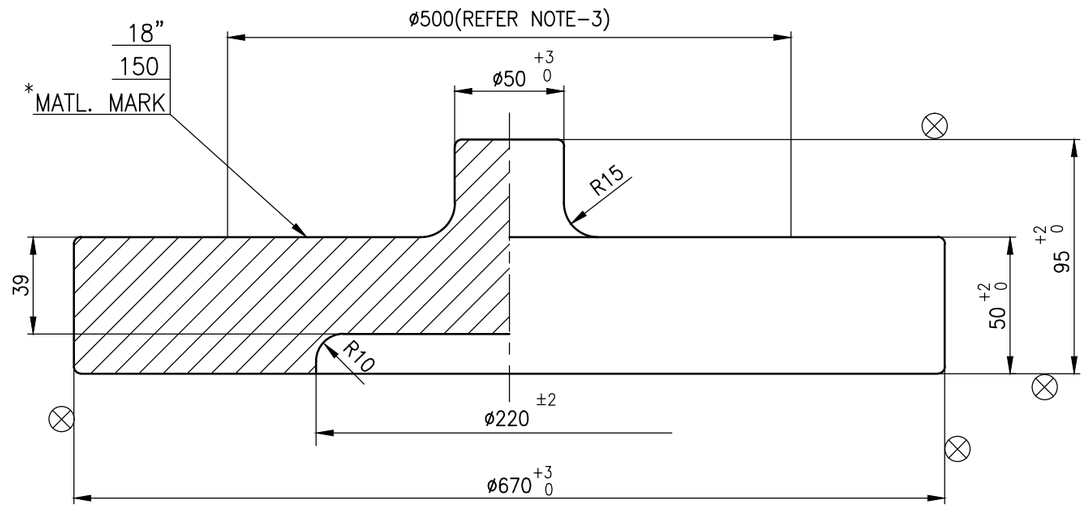

NOTES:-

1 . NECESSARY MACHINING ALLOWANCES HAVE BEEN ADDED ON ALL MACHINABLE SURFACES
2 . PERMISIBLE DIMENSIONAL DEVIATIONS OF NON TOLERANCED CASTING DIMENSIONS – REFER LATEST APPLICABLE QUALITY WORK INSTRUCTION.
3 . ALL CAST LETTERS, MELT. No. & INSPECTION SEAL SHALL BE MADE WITHIN THE CIRCLE ø500 AS SHOWN.
4 . CASTING SHALL COMPLY WITH THE REQUIREMENTS OF LATEST APPLICABLE QUALITY WORK INSTRUCTIONS.
5 . UNSPECIFIED CASTING RADII 3 – 5 MM
6 . HEIGHT OF CASTING LETTERS 15MM
7. ⊗ SURFACE TO BE FURTHER MACHINED.

SL. NO.	DRAWING NO.	MATL. SPECN.		MATL. CODE	*MATL. MARK	
03	3-V-Z087-25336R	CI, IS-210, Gr.FG260, AN	ATTEST	922032400000	CI	
02	3-V-Z086-25336R	SA217 WC9, NT		922032390000	WC9	
01	3-V-Z085-25336R	SA216 WCB, NR		922032380000	WCB	

NO OFF	DESCRIPTION	MATL CODE	MATL SPECN	HEAT TREATMENT	SCRAP SORT	NET WT (kg)	GROSS WT (kg)	DRAWING No	ITEM No

TYPE OF PRODUCT
OR NAME OF
CUSTOMER/PROJECT

BHARAT HEAVY ELECTRICALS LTD.,
UNIT: HIGH PRESSURE BOILER PLANT.
TIRUCHIRAPALLI-620014.
365-121

	NAME	SIGN	DATE	NO.OF VAR.
DRN	V.BAIRAVAN		03.03.14	
CHD	S.SATHEES		03.03.14	
APPD	K.RAJASEKARAN		03.03.14	

DEPT	SCALE	WEIGHT (KG).	REFERENCE INFORMATIONS	NO. OF ITEMS
VL	N T S	135		
CODE 320				

TITLE: COVER
CASTING 18"/150CLASS

CARD CODE: U 01

DRAWING NO. 3-V-0000-25336R (REFER TABLE)

REV

REV	DATE	ALTERED
		CHD & APPD

CAUTION: The information on this document is the property of BHARAT HEAVY ELECTRICALS LTD. It must not be used directly or indirectly in any way detrimental to the interest of the company.

Size A3

ALL DIMENSIONS ARE IN MILLIMETRES. FOR TOLERANCES OF UNTOLERANCED DIMENSIONS DURING MANUFACTURE REFER RELEVANT QCP / QP.

DRAWING NO. 3-V-0000-25354R

06

SL. No.	DRAWING No.	MATL. SPECN.		MATL. CODE	SIZE/RATING	MATL. MARK * TO BE PUNCHED	WT. IN KG	øD	ød	L	L1
01	3-V-Z082-25354R	A216 WCB,AN	CERTIFY	922032540000	350/150CL	WCB	27.65	380	69	118	28
02	3-V-Z083-25354R	A217 WC9,NT		9222032550000		WC9					
03	3-V-U555-25354R	A351 CF8,SH		922033970000		CF8					
04	3-V-Z085-25354R	A216 WCB,AN		922032750000	450/150CL	WCB	68.53	495	96	156	41
05	3-V-Z086-25354R	A217 WC9,NT		922032760000		WC9					
06	3-V-Z089-25354R	A216 WCB,AN		922032920000	400/150CL	WCB	51.84	434	90	148	40
07	3-V-Z090-25354R	A217 WC9,NT		922032930000		WC9					
08	3-V-U554-25354R	A351 CF8,SH		922033930000		CF8					
09	3-V-Z114-25354R	SA995 CD3MN, REF. NOTE		922036200000		CD3MN					
10	3-V-Z119-25354R	SA351 CF8,SH		922037240000	450/150CL	CF8	68.53	495	96	156	41
11	3-V-Z115-25354R	SA995 CD3MN, REF. NOTE		922036150000	500/150CL	CD3MN	81.0	546	100	161	40

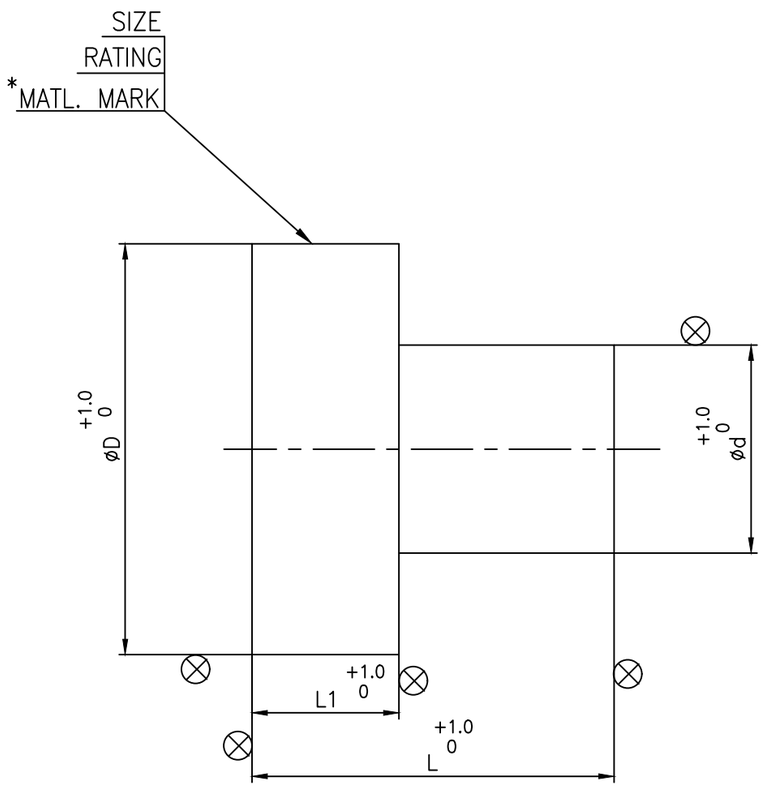

NOTES:-

1. NECESSARY MACHINING ALLOWANCES HAVE BEEN ADDED ON ALL MACHINABLE SURFACES
2. PERMISIBLE DIMENSIONAL DEVIATIONS OF NON TOLERANCED CASTING DIMENSIONS – REFER LATEST APPLICABLE QUALITY WORK INSTRUCTION.
3. CASTING SHALL COMPLY WITH THE REQUIREMENTS OF LATEST APPLICABLE QUALITY WORK INSTRUCTIONS.
4. UNSPECIFIED CASTING RADII 3 mm
5. HEIGHT OF CASTING LETTERS 15mm
6. ⊗ SURFACE TO BE FURTHER MACHINED.
7. HEAT TREATMENT FOR SA995 CD3MN AS PER ASME STANDARD SA-995 TABLE 1

   (HEAT TO 2050°F [1120°C] MINIMUM FOR SUFFICIENT TIME TO HEAT CASTING UNIFORMLY TO TEMPERATURE AND WATER QUENCH, OR THE CASTING MAY BE FURNACE COOLED TO 1850°F [1010°C] MINIMUM, HOLD FOR 15 MIN MINIMUM AND THEN WATER QUENCH. A RAPID COOL BY OTHER MEANS MAY BE EMPLOYED IN LIEU OF WATER QUENCH.)

NO OFF	DESCRIPTION	MATL CODE	MATL SPECN	HEAT TREATMENT	SCRAP SORT	NET WT (kg)	GROSS WT (kg)	DRAWING No	ITEM No
–	–	–	–	–	–	–	–	–	–

REV	DATE	ALTERED	R.P.SINGH
03	28.12.18	CHD & APPD	SSK & KRS
		SL. No. 11 INCLUDED.	

REV	DATE	ALTERED	R.P.SINGH
02	19.10.18	CHD & APPD	SSK & KRS
		SL. No. 09 & 10 INCLUDED. NOTES No. 7 INCLUDED.	

CAUTION: The information on this document is the property of BHARAT HEAVY ELECTRICALS LTD. It must not be used directly or indirectly in any way detrimental to the interest of the company.

TYPE OF PRODUCT OR NAME OF CUSTOMER/PROJECT: H M

BHARAT HEAVY ELECTRICALS LTD.,
UNIT: HIGH PRESSURE BOILER PLANT.
TIRUCHIRAPALLI- 620014.
365-121

	NAME	SIGN	DATE	NO.OF VAR.
DRN	V.BAIRAVAN		26.03.14	
CHD	S.SATHEESKUMAR		26.03.14	
APPD	K.RAJASEKARAN		26.03.14	

DEPT	CODE	SCALE	WEIGHT (KG).	REFERENCE INFORMATIONS	NO. OF ITEMS
VL	320	N T S	REF.TABLE		

TITLE	CARD CODE	DRAWING NO.	REV
FLAP	U 01	3-V-0000-25354R	03

Size A3

ALL DIMENSIONS ARE IN MILLIMETRES. FOR TOLERANCES OF UNTOLERANCED DIMENSIONS DURING MANUFACTURE REFER RELEVANT QCP / QP.

DRAWING NO. 3-V-0000-25354R

06

SL. No.	DRAWING No.	MATL. SPECN.		MATL. CODE	SIZE/RATING	MATL. MARK * TO BE PUNCHED	WT. IN KG	øD	ød	L	L1
01	3-V-Z082-25354R	A216 WCB,AN	CERTIFY	922032540000	350/150CL	WCB	27.65	380	69	118	28
02	3-V-Z083-25354R	A217 WC9,NT		9222032550000		WC9					
03	3-V-U555-25354R	A351 CF8,SH		922033970000		CF8					
04	3-V-Z085-25354R	A216 WCB,AN		922032750000	450/150CL	WCB	68.53	495	96	156	41
05	3-V-Z086-25354R	A217 WC9,NT		922032760000		WC9					
06	3-V-Z089-25354R	A216 WCB,AN		922032920000	400/150CL	WCB	51.84	434	90	148	40
07	3-V-Z090-25354R	A217 WC9,NT		922032930000		WC9					
08	3-V-U554-25354R	A351 CF8,SH		922033930000		CF8					
09	3-V-Z114-25354R	SA995 CD3MN, REF. NOTE		922036200000		CD3MN					
10	3-V-Z119-25354R	SA351 CF8,SH		922037240000	450/150CL	CF8	68.53	495	96	156	41
11	3-V-Z115-25354R	SA995 CD3MN, REF. NOTE		922036150000	500/150CL	CD3MN	81.0	546	100	161	40

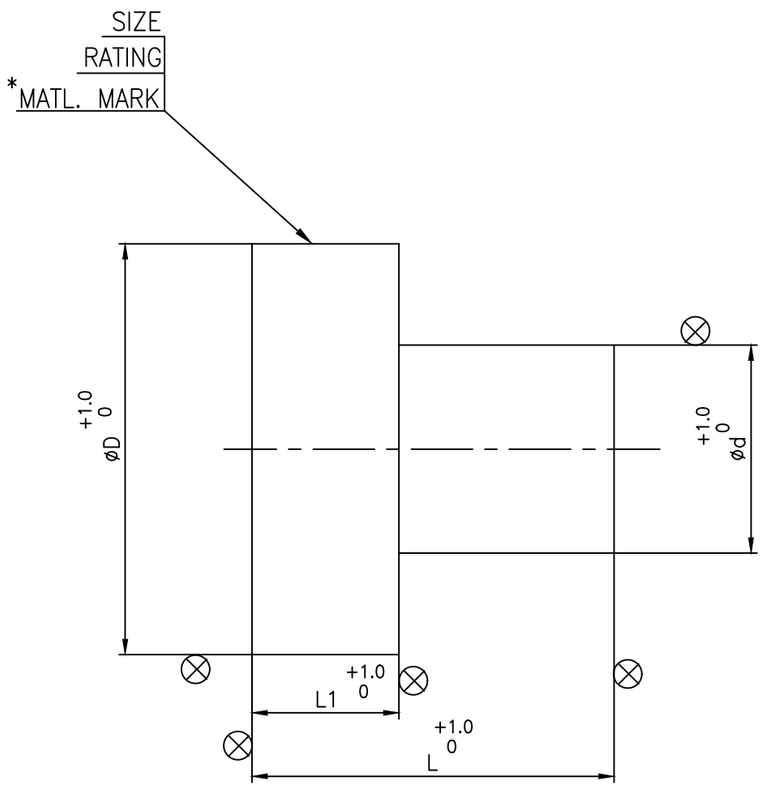

NOTES:-

1. NECESSARY MACHINING ALLOWANCES HAVE BEEN ADDED ON ALL MACHINABLE SURFACES
2. PERMISIBLE DIMENSIONAL DEVIATIONS OF NON TOLERANCED CASTING DIMENSIONS – REFER LATEST APPLICABLE QUALITY WORK INSTRUCTION.
3. CASTING SHALL COMPLY WITH THE REQUIREMENTS OF LATEST APPLICABLE QUALITY WORK INSTRUCTIONS.
4. UNSPECIFIED CASTING RADII 3 mm
5. HEIGHT OF CASTING LETTERS 15mm
6. ⊗ SURFACE TO BE FURTHER MACHINED.
7. HEAT TREATMENT FOR SA995 CD3MN AS PER ASME STANDARD SA-995 TABLE 1

   (HEAT TO 2050°F [1120°C] MINIMUM FOR SUFFICIENT TIME TO HEAT CASTING UNIFORMLY TO TEMPERATURE AND WATER QUENCH, OR THE CASTING MAY BE FURNACE COOLED TO 1850°F [1010°C] MINIMUM, HOLD FOR 15 MIN MINIMUM AND THEN WATER QUENCH. A RAPID COOL BY OTHER MEANS MAY BE EMPLOYED IN LIEU OF WATER QUENCH.)

NO OFF	DESCRIPTION	MATL CODE	MATL SPECN	HEAT TREATMENT	SCRAP SORT	NET WT (kg)	GROSS WT (kg)	DRAWING No	ITEM No
–	–	–	–	–	–	–	–	–	–

REV	DATE	ALTERED	R.P.SINGH
03	28.12.18	CHD & APPD	SSK & KRS
		SL. No. 11 INCLUDED.	

REV	DATE	ALTERED	R.P.SINGH
02	19.10.18	CHD & APPD	SSK & KRS
		SL. No. 09 & 10 INCLUDED. NOTES No. 7 INCLUDED.	

CAUTION: The information on this document is the property of BHARAT HEAVY ELECTRICALS LTD. It must not be used directly or indirectly in any way detrimental to the interest of the company.

TYPE OF PRODUCT OR NAME OF CUSTOMER/PROJECT: H M

BHARAT HEAVY ELECTRICALS LTD.,
UNIT: HIGH PRESSURE BOILER PLANT.
TIRUCHIRAPALLI- 620014.
365-121

	NAME	SIGN	DATE	NO.OF VAR.
DRN	V.BAIRAVAN		26.03.14	
CHD	S.SATHEESKUMAR		26.03.14	
APPD	K.RAJASEKARAN		26.03.14	

DEPT	CODE	SCALE	WEIGHT (KG).	REFERENCE INFORMATIONS	NO. OF ITEMS
VL	320	N T S	REF.TABLE		

TITLE	CARD CODE	DRAWING NO.	REV
FLAP	U 01	3-V-0000-25354R	03

Size A3

ALL DIMENSIONS ARE IN MILLIMETRES. FOR TOLERANCES OF UNTOLERANCED DIMENSIONS DURING MANUFACTURE REFER RELEVANT QCP / QP.

DRAWING NO. 3-V-0000-25362R

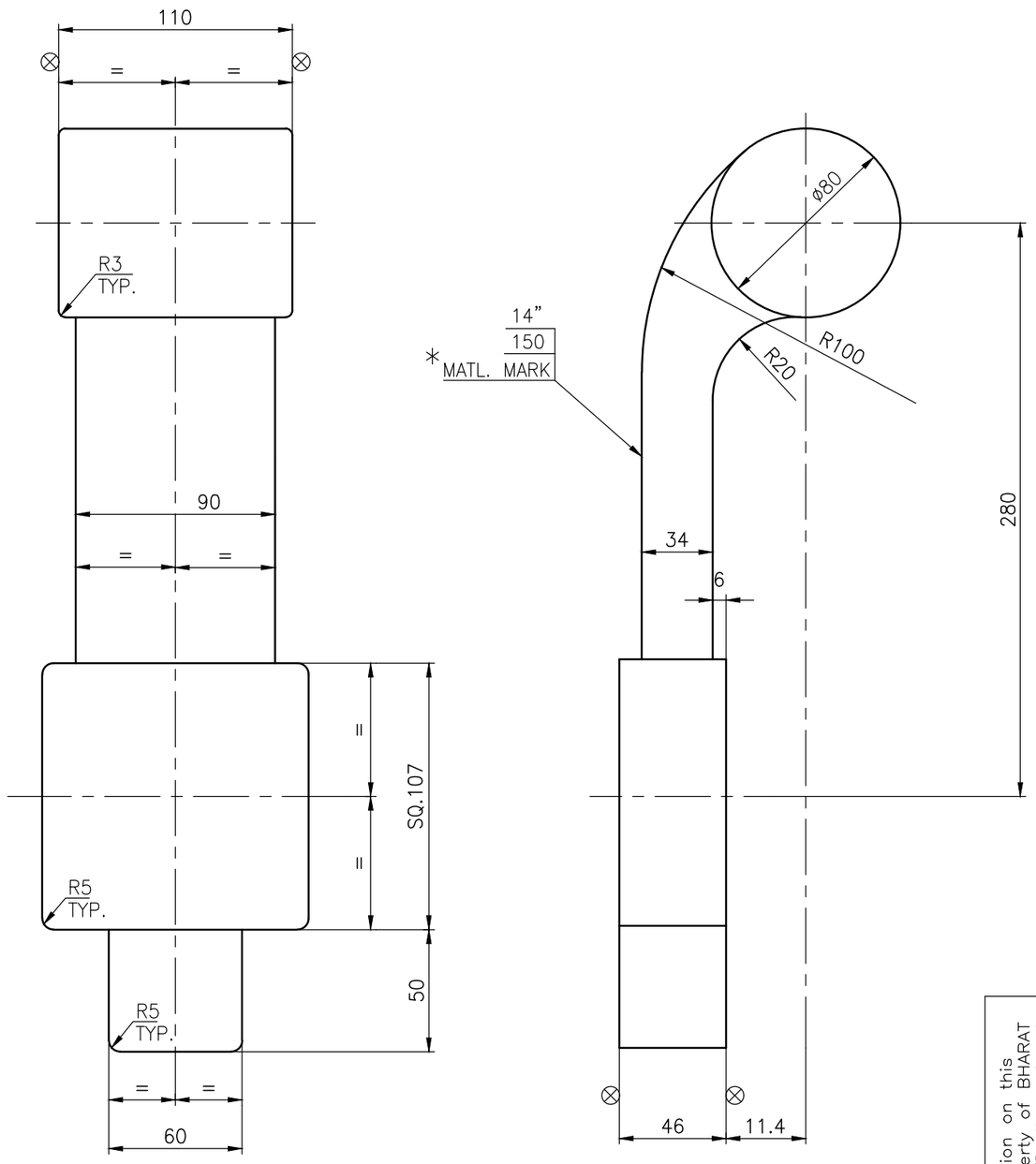

100

NOTE

01. UNSPECIFIED FILLET RADII = R3
02. MACHINING ALLOWANCES HAVE BEEN ADDED ON ALL MACHINABLE SURFACES.
5. ⊗ SURFACE TO BE FURTHER MACHINED.
04. CASTING SHALL COMPLY WITH THE REQUIREMENTS OF APPLICABLE QUALITY PROCEDURE.

SL. No.	DRAWING NO.	MATL. SPECN.	MATL. CODE	MATL. * MARK
03	3-V-U555-25362R	A351 CF8, SH, CERTIFY	92 203 398 0000	CF8
02	3-V-Z083-25362R	A217 WC9, NT, CERTIFY	92 203 270 0000	WC9
01	3-V-Z082-25362R	A216 WCB, NR, CERTIFY	92 203 269 0000	WCB

SL No.	DESCRIPTION	MATL CODE	MATL SPECN	HEAT TREATMENT	SCRAP SORT	NET WT (kg)	GROSS WT (kg)	DRAWING No / COMPONENT CODE	ITEM No

REV	DATE	ALTERED	M.SELVAM
01	23.07.15	CHD & APPD	M.S & SSK

SL. No. 03 INCLUDED

CAUTION: The information on this document is the property of BHARAT HEAVY ELECTRICALS LTD. It must not be used directly or indirectly in any way detrimental to the interest of the company.

TYPE OF PRODUCT OR NAME OF CUSTOMER/PROJECT: CS

BHARAT HEAVY ELECTRICALS LTD.
UNIT: HIGH PRESSURE BOILER PLANT.
TIRUCHIRAPALLI 620014.
365-121

	NAME	SIGN	DATE	NO.OF VAR.
DRN	V.BAIRAVAN		29.03.14	
CHD	S.SATHEESKUMAR		29.03.14	
APPD	K.RAJASEKARAN		29.03.14	

DEPT	CODE	SCALE	WEIGHT (KG).	REFERENCE INFORMATIONS	NO. OF ITEMS
VL	320	NTS	8.47		

TITLE	CARD CODE	DRAWING NO.	REV
ARM (14"-150CL)	U 01	3-V-0000-25362R	01

Size A3

ALL DIMENSIONS ARE IN MILLIMETRES. FOR TOLERANCES OF UNTOLERANCED DIMENSIONS DURING MANUFACTURE REFER RELEVANT QCP / QP.

DRAWING NO. 3-V-0000-25364R

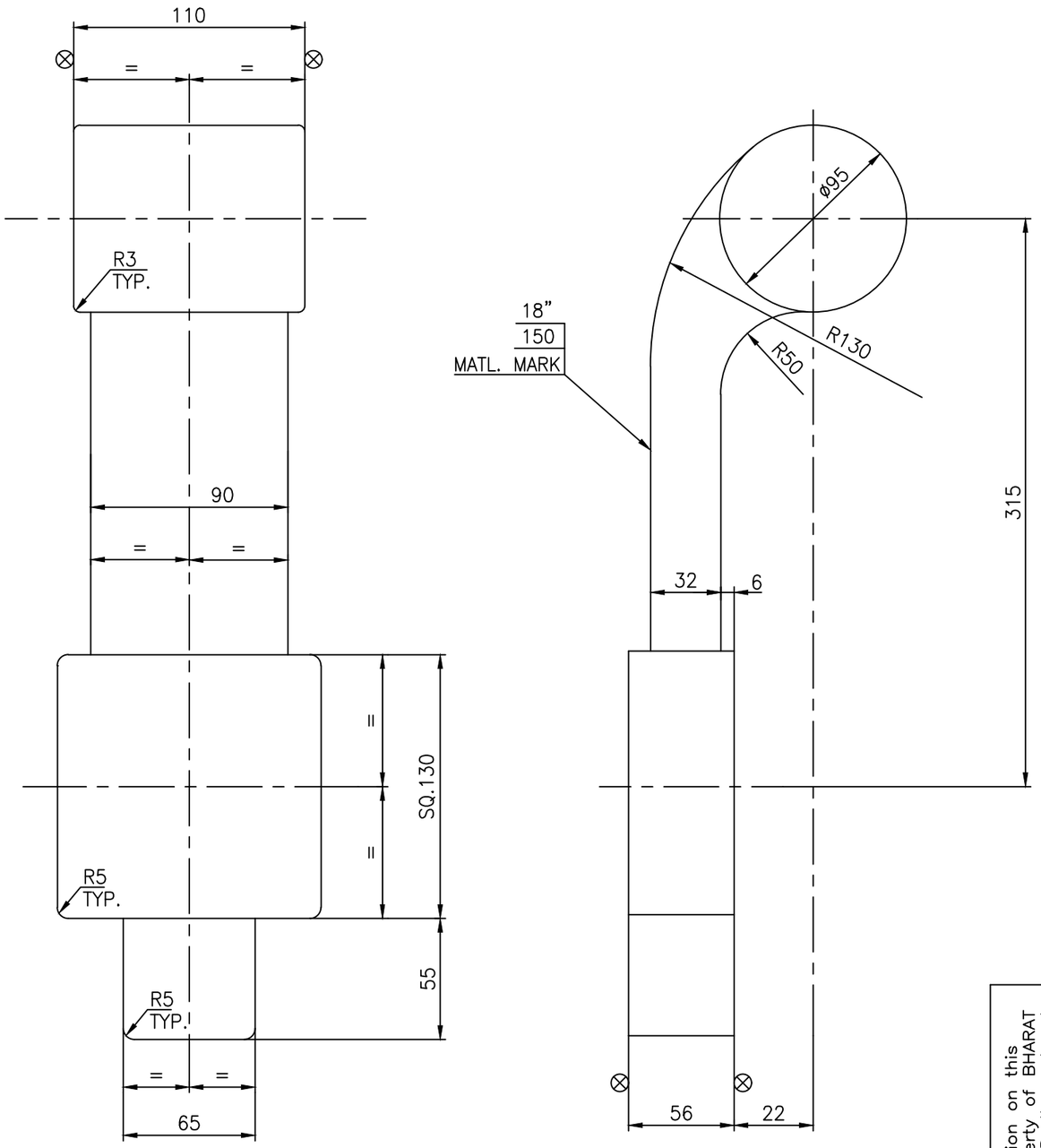

100

NOTE

01. UNSPECIFIED FILLET RADII = R3
02. MACHINING ALLOWANCES HAVE BEEN ADDED ON ALL MACHINABLE SURFACES.
5. ⊗ SURFACE TO BE FURTHER MACHINED.
04. CASTING SHALL COMPLY WITH THE REQUIREMENTS OF APPLICABLE QUALITY PROCEDURE.

SL. No.	DRAWING NO.	MATL. SPECN.	MATL. CODE	*MATL. MARK	
03	3-V-Z119-25364R	A351 CF8, SH, CERTIFY	922037250000	CF8	
02	3-V-Z086-25364R	A217 WC9, NT, CERTIFY	922032720000	WC9	
01	3-V-Z085-25364R	A216 WCB, NR, CERTIFY	922032710000	WCB	

SL No.	DESCRIPTION	MATL CODE	MATL SPECN	HEAT TREATMENT	SCRAP SORT	NET WT (kg)	GROSS WT (kg)	DRAWING No / COMPONENT CODE	ITEM No

REV	DATE	ALTERED R.P.SINGH
01	10.09.18	CHD & APPD SSK & KRS

SL.No. 03 INCLUDED.

CAUTION: The information on this document is the property of BHARAT HEAVY ELECTRICALS LTD. It must not be used directly or indirectly in any way detrimental to the interest of the company.

TYPE OF PRODUCT OR NAME OF CUSTOMER/PROJECT: CS

BHARAT HEAVY ELECTRICALS LTD.
UNIT: HIGH PRESSURE BOILER PLANT.
TIRUCHIRAPALLI 620014.
365-121

	NAME	SIGN	DATE	NO.OF VAR.
DRN	V.BAIRAVAN		01.04.14	
CHD	S.SATHEESKUMAR		01.04.14	
APPD	K.RAJASEKARAN		01.04.14	

DEPT	SCALE	WEIGHT (KG).	REFERENCE INFORMATIONS	NO. OF ITEMS
VL	NTS	20.7		
CODE 320				

TITLE	CARD CODE	DRAWING NO.	REV
ARM CASTING (18"-150CL)	U 01	3-V-0000-25364R	01

Size A3

TP-DG-4-V-0000-06966R
CORPORATE DRG ID

ALL DIMENSIONS ARE IN MILLIMETRES.
FOR TOLERANCES OF UNTOLERANCED DIMENSIONS DURING MANUFACTURE REFER RELEVANT QCP/QP

REV	DATE	ALTERED K.P.LEON
03	25.07.97	CHD & APPD

SL.No.11 INCLUDED

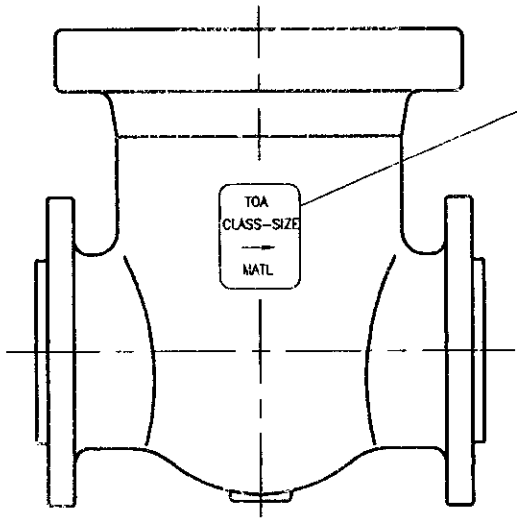

TOA
CLASS-SIZE
→
MATL

EMBOSSING DETAIL
(REFER TABLE)

NOTES:

1. THE EMBOSSING DETAILS SHALL BE AS PER THE DRAWING.
2. FOR ALL OTHER DETAILS REFER THE BASIC DRG. No. LISTED IN THE TABULATION.

SL. NO.	DRAWING NO.	MATL. CODE	BASIC DRAWING NO.	MATERIAL SPECIFICATION	CLASS	SIZE	MATL.
					* EMBOSSING DETAILS		
11	4-V-K872-06966R	922009280000	2-V-N251-05865R	A216-WCB, NR ATTEST	150	4	WCB
10	4-V-K824-06966R	922008730000	1-V-B102-02628R/01	A216-WCB, NR ATTEST	300	3	WCB
09	4-V-K750-06966R/01	922008190000	1-V-B102-02628R/01	A216-WCB, NR ATTEST	600	3	WCB
08	4-V-K749-06966R/01	922008180000	2-V-N239-05862R	A216-WCB, NR ATTEST	300	12	WCB
07	4-V-K732-06966R/01	922008170000	2-V-N235-05859R	A216-WCB, NR ATTEST	300	10	WCB
06	4-V-K731-06966R/01	922008160000	2-V-N244-05864R	A216-WCB, NR ATTEST	300	8	WCB
05	4-V-K730-06966R/01	922008150000	2-V-N248-05837R	A216-WCB, NR ATTEST	300	6	WCB
04	4-V-K729-06966R/01	922008140000	2-V-M473-06208R	A216-WCB, NR ATTEST	300	5	WCB
03	4-V-K728-06966R/01	922008130000	2-V-N251-05865R	A216-WCB, NR ATTEST	300	4	WCB
02	4-V-K727-06966R/01	922008120000	2-V-N255-05867R	A216-WCB, NR ATTEST	300	3	WCB
01	4-V-K726-06966R/01	922008110000	2-V-M472-06207R	A216-WCB, NR ATTEST	300	2-1/2	WCB

DRAWING RETRACED WITH REV.02 ON 25.07.97 (REFER DCN.CS:0686)

NO OFF	DESCRIPTION	MATL CODE	MATL SPECN	HEAT TREATMENT	SCRAP SORT	NET WT (kg)	GROSS WT (kg)	DRAWING No	ITEM No

BHARAT HEAVY ELECTRICALS LTD.,
UNIT: HIGH PRESSURE BOILER PLANT.
TIRUCHIRAPALLI 620014.
365-122

	NAME	SIGN	DATE	NO.OF VAR
DRN	K.P.LEON		25.07.97	
CHD	N.DHANAPAL		25.07.97	
APPD	A.VISWANATHAN		25.07.97	

DEPT	SCALE	WEIGHT (KG).	REFERENCE INFORMATIONS	NO. OF ITEMS
VL	N T S		CAD DRG: C406966R	
CODE 320				

TITLE	CARD CODE	DRAWING NO.	REV
BODY (BUTT WELDED)	U 01	4-V-0000-06966R	03

CAUTION: The information on this document is the property of BHARAT HEAVY ELECTRICALS LTD. It must not be used directly or indirectly in any way detrimental to the interest of the company.

TP-DG-4-V-0000-06966R
CORPORATE DRG ID

TP-DG-2-V-0000-15005R
CORPORATE DRG 1D

FIRST ANGLE PROJECTION (ALL DIMENSIONS IN MILLIMETRES)

CAUTION THE INFORMATION ON THIS DOCUMENT IS THE PROPERTY OF BHARAT HEAVY ELECTRICALS LTD., IT MUST BE USED DIRECTLY OR INDIRECTLY IN ANYWAY DETRIMENTAL TO THE INTEREST OF THE COMPANY.

DRAWING NO. REF. TABLE 2-V-0000-15005 R/4

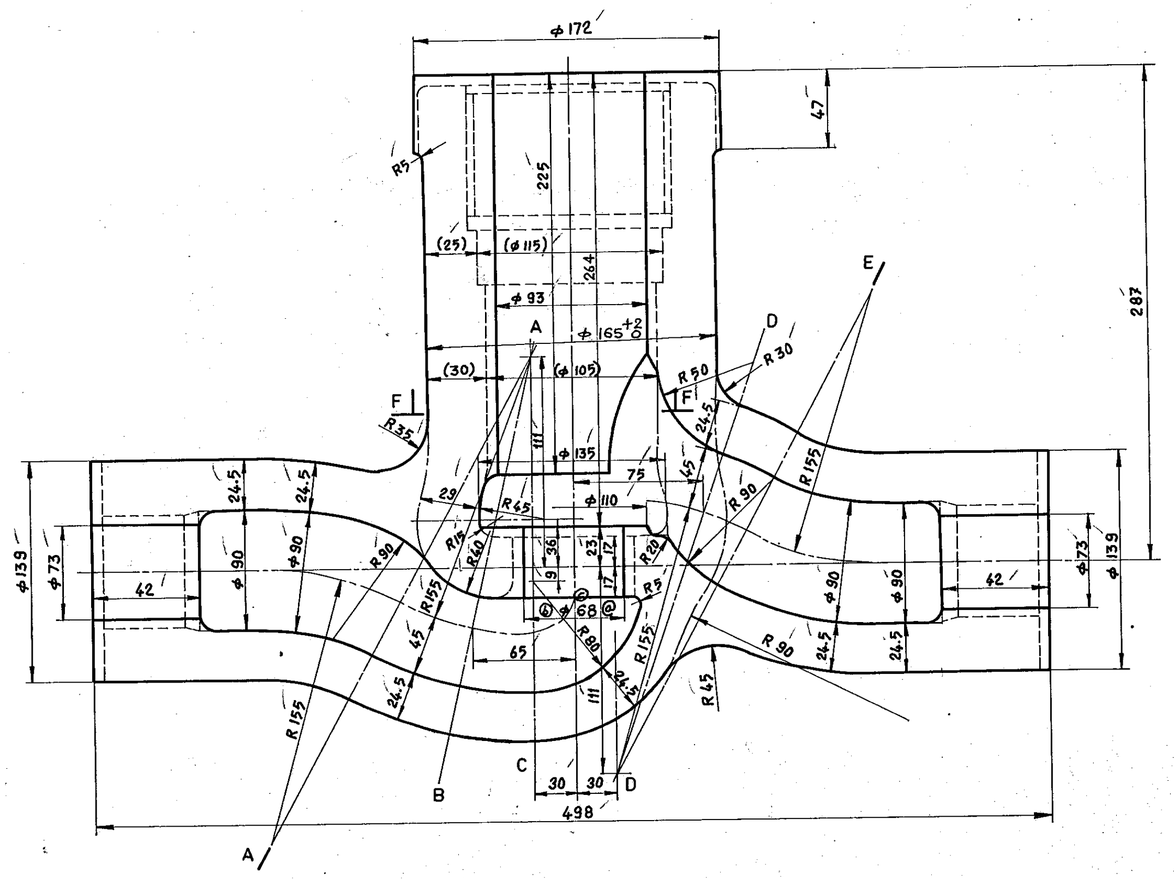

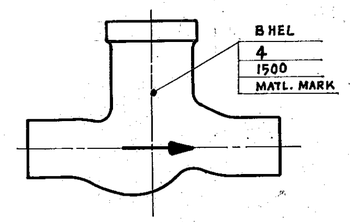

SECTION-FF

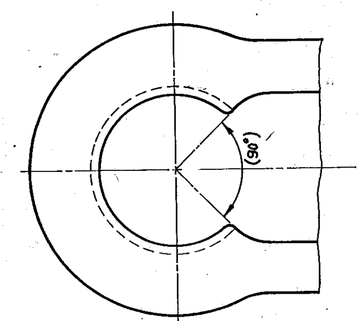

NOTE :-

1. ★ALL THE SPECIAL CLASS CASTINGS ARE TO BE SUBJECTED RT/UT ON ALL CRITICAL LOCATIONS.
2. ★ALL EXTERIOR AND ACCESSIBLE INTERIOR SURFACE OF BODY SHALL BE MPI/LPI TESTED.
3. DOTTED LINES SHOWS FINISH MACHINED CONFIGURATION.
4. FOR ALL OTHER DETAILS LIKE DIMENSIONAL TOLERANCE, EMBOSSING, PUNCHING DETAILS AND HYD. TEST PRESSURE ETC REFER LATEST APPLICABLE TDC.
5. ★ FOR THESE SPECIAL CLASS VALVES EMBOSSING SHALL BE 1500SPL

MF 759216

SL.No.	DRAWING No.	MATERIAL SPECN.	MATL. CODE	MATL. MARK
8 ★	2-V-G023-15005 R/4	A 217 WC9, ATTEST, NT	92 150 024	WC9
7 ★	2-V-G022-15005 R/4	A 217 WC6, ATTEST, NT	92 150 023	WC6
6 ★	2-V-G021-15005 R/4	A 216 WCC, ATTEST, AN	92 150 022	WCC
5 ★	2 V G017-15005 R/4	A 216 WCB, ATTEST, AN	92 150 021	WCB
4	2-V-G007-15005 R/4	A 217 WC9, ATTEST, NT	92 150 020	WC9
3	2-V-G006-15005 R/4	A 217 WC6, ATTEST, NT	92 150 019	WC6
2	2-V-G005-15005 R/4	A 216 WCC, ATTEST, AN	92 150 018	WCC
1	2-V-G001-15005 R/4	A 216 WCB, ATTEST, AN	92 150 017	WCB

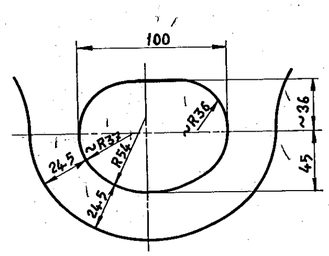

SECTION - AA

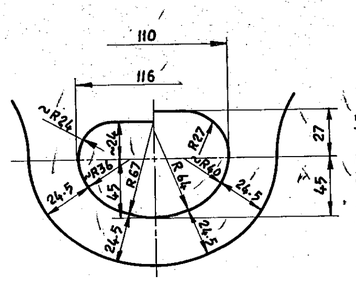

SECTION-AB SECTION-AC

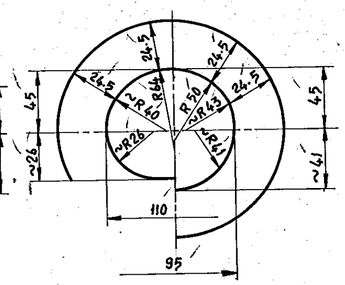

SECTION-DD SECTION-DE

REV	DATE	ALTD	CHKD	
4	29.12.94		M.R.K.	NOTES MODIFIED IN LINE WITH LATEST TDC: DCN NO: TA0441
03	18.5.89	ALT. R.L.	CHE. V.B.	ⓒ DIM. φ68 WAS φ23. DCN No. TA 0078.
02	27.3.89	ALT. R.L.	CHE. V.B.	ⓐ DIM. φ68 CHANGED TO φ23 TO UNIFY WITH REG. NEEDLE BODY DRG. No. 3-E 38805 (2202).
01	07-02-86	ALTERED MRK	CHECKED VB	⓪ φ78 CHANGED TO φ68 TO UNIFY WITH REG. NEEDLE VALVE BODY DRG. No. 3-E 28264 (1412)

05-228/B

BHARAT HEAVY ELECTRICALS LTD.,
BOILER PLANT UNIT, TIRUCHIRAPALLI-620 014

DEPT	CODE	SCALE	WEIGHT (KG)
VL	320	NTS	68.0

TITLE: BODY

3426B-10 & A 312 6B-10 1.4/1 1500 CLASS

	NAME	SIGN	DATE
DRAWN	K.N.C		4.9.94
CHECKED	M.R.K.		4.9.94
APPROVED	V.B.		4.9.94

DIMENSIONS TO BE CONTROLLED WITHIN LIMITS AS SHOWN. MACHINING TOLERANCE ±0.25 mm UNLESS OTHERWISE SHOWN NON-MACHINING TOLERANCE ±

CARD CODE U01

DRAWING NO. REF. TABLE 2-V-0000-15005 R 4

SIZE A2

TP-DG-2-V-0000-15005R
CORPORATE DRG 1D

FIRST ANGLE PROJECTION (ALL DIMENSIONS IN MILLI(METRES)

DRAWING NO. 2-V-0000-15012R/1

CAUTION THE INFORMATION ON THIS DOCUMENT IS THE PROPERTY OF BHARAT HEAVY ELECTRICALS LTD., IT MUST NOT BE USED DIRECTLY OR INDIRECTLY IN ANYWAY DETRIMENTAL TO THE INTEREST OF THE COMPANY.

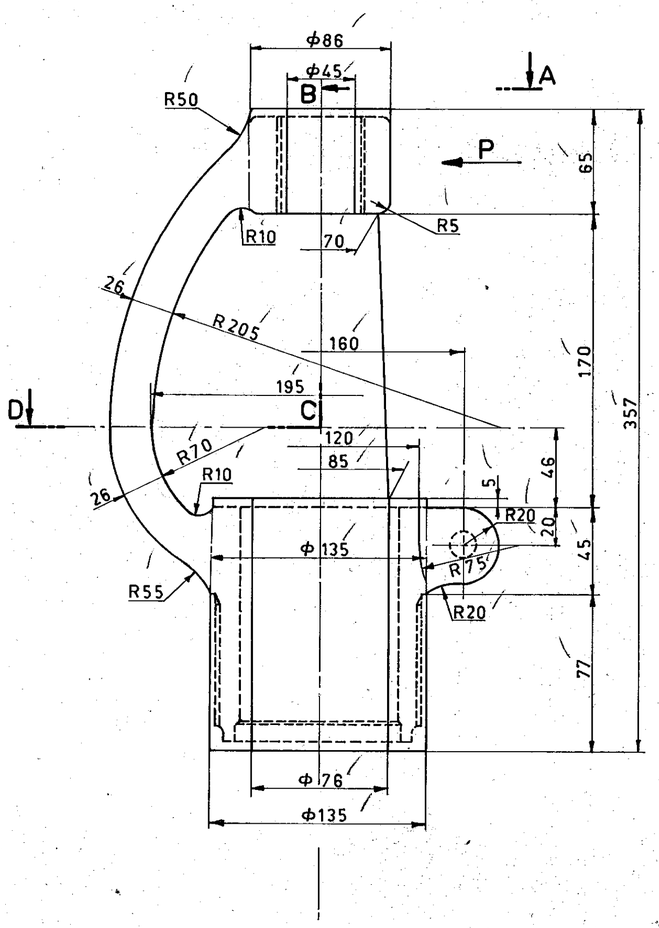

VIEW-P (DETAILS TO BE CAST)

MATL MARK
4 - 1500

NOTE:

1. DOTTED LINES SHOWS FINISH MACHINED CONFIGURATION.
2. FOR ALL OTHER DETAILS LIKE DIMENSIONAL TOLERANCE, EMBOSSING, ETC. REFER LATEST APPLICABLE TDC:

SECTION-ABCD

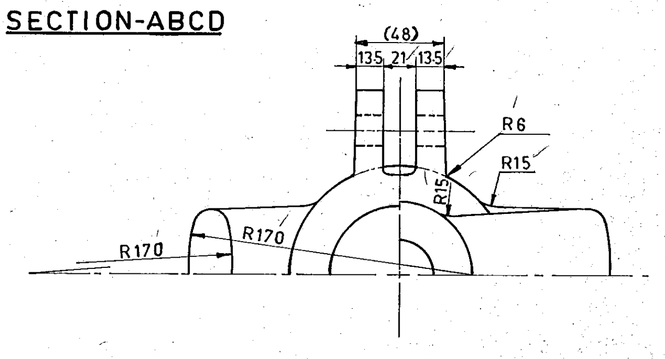

MF 759209

SL NO	DRAWING NO	MATERIAL SPECN	MATL CODE	MATL MARK
2	2 V G007 15012R/1	A217 WC6, NT, PRODUCT ATTEST	92 150 116	WC6
1	2 V G001 15012R/1	A216 WCB, AN, PRODUCT ATTEST	92 150 115	WCB

BHARAT HEAVY ELECTRICALS LTD.,
BOILER PLANT UNIT, TIRUCHIRAPALLI-620 014

05-228/B

DEPT VL | CODE 320 | SCALE NTS | WEIGHT (KGS) 25.00 | REF TO ASSY. DRG 3-E26106 (0219) | IT NO.

TITLE YOKE (100/1500 CLASS) A3126B-10

	NAME	SIGN	DATE
DRAWN	K.R.SEKAR		25.07.84
CHECKED	M.R.K.		3/9/84
APPROVED	VB		4.9.84

DIMENSIONS TO BE CONTROLLED WITHIN LIMITS AS SHOWN. MACHINING TOLERANCE ±0.25 UNLESS OTHERWISE SHOWN NON-MACHINING TOLERANCE ±

CARD CODE U01 | DRAWING NO. 2-V-0000-15012R | REV. 1

SIZE A2

REV.	DATE	ALTERED	
01	5.12.94	CHECKED	M.K.C.

ZONE

NOTE NO. 2 MODIFIED.

DCN NO: TA 0425

646

FIRST ANGLE PROJECTION (ALL DIMENSIONS IN MILLIMETRES)

CAUTION THE INFORMATION ON THIS DOCUMENT IS THE PROPERTY OF BHARAT HEAVY ELECTRICALS LTD. IT MUST NOT BE USED DIRECTLY OR INDIRECTLY IN ANY WAY DETRIMENTAL TO THE INTEREST OF THE COMPANY.

DRAWING No. 2-V-0000-15050 R/1

05-228/C

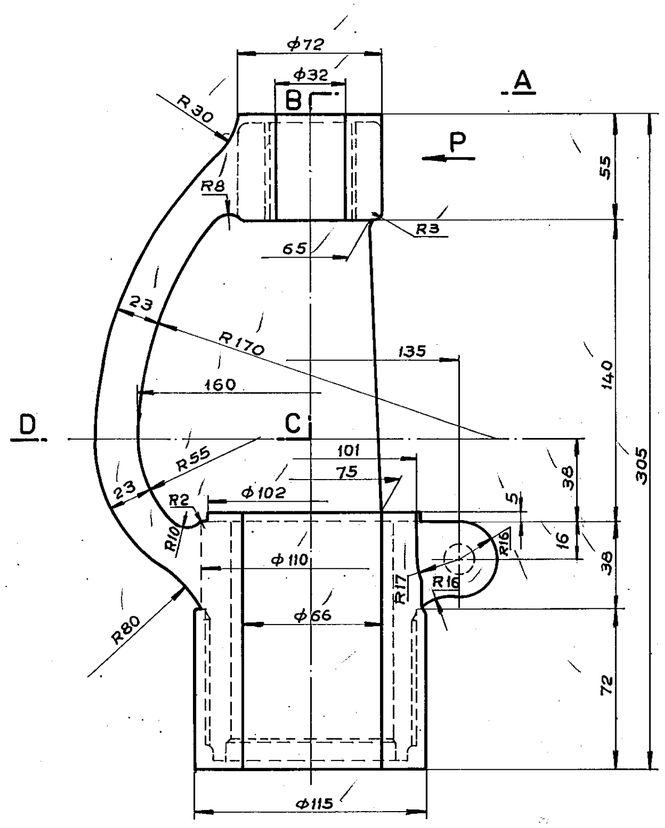

VIEW-P (DETAILS TO BE CAST)
MATL. MARK
3 - 1500

NOTE:

1. DOTTED LINES SHOWS FINISH MACHINED CONFIGURATION.
2. FOR ALL OTHER DETAILS LIKE DIMENSIONAL TOLERANCE, EMBOSSING ETC. REFER LATEST APPLICABLE TDC.

SECTION-ABCD

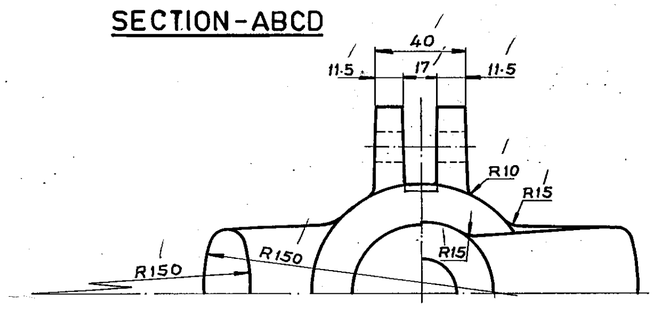

SL. NO.	DRAWING NO.	MATL. SPECN.	MATL. CODE	MATL. MARK.
2	2-V-G047-15050R/1	A217 WC6, NT, PRODUCT ATTEST	92 150 723	WC6
1	2-V-G045-15050R/1	A216 WCB, AN, PRODUCT ATTEST	92 150 722	WCB

TYPE OF PRODUCT OR NAME OF CUSTOMER/PROJECT

MF 750128

Bharat Heavy Electricals Ltd.,
BOILER PLANT UNIT
TIRUCHIRAPALLI-620 014

	NAME	SIGN	DATE
DRN	V. BAIRAVAN		13/2/95
CHD	M. R. K.		15/2/95
APPD	V.B.		16/2/95

NO. OF VAR

REV	DATE	ALTERED / CHECKED	
01	5.12.94		NOTE NO. 2 MODIFIED. DCN NO: TA 0425

ZONE

DEPT	GRADE OF UNTOL. DIM	SCALE	WEIGHT (kg)	TOA DRG. NO.	ITEM NO.
VL	E/M/f	N.T.S.	13.0	3-E 29192 (0891)	

CODE 320

TITLE: YOKE
A 3126 - 8 - H (80/1500C)

CARD CODE: U 01

DRAWING NO. 2-V-0000-15050R

REV 1

Size A2

FIRST ANGLE PROJECTION (ALL DIMENSIONS IN MILLIMETRES)

DRAWING No. REF. TABLE 2-V-0000-15104R/5

CAUTION THE INFORMATION ON THIS DOCUMENT IS THE PROPERTY OF BHARAT HEAVY ELECTRICALS LTD. IT MUST NOT BE USED DIRECTLY OR INDIRECTLY IN ANY WAY DETRIMENTAL TO THE INTEREST OF THE COMPANY.

05-228/C

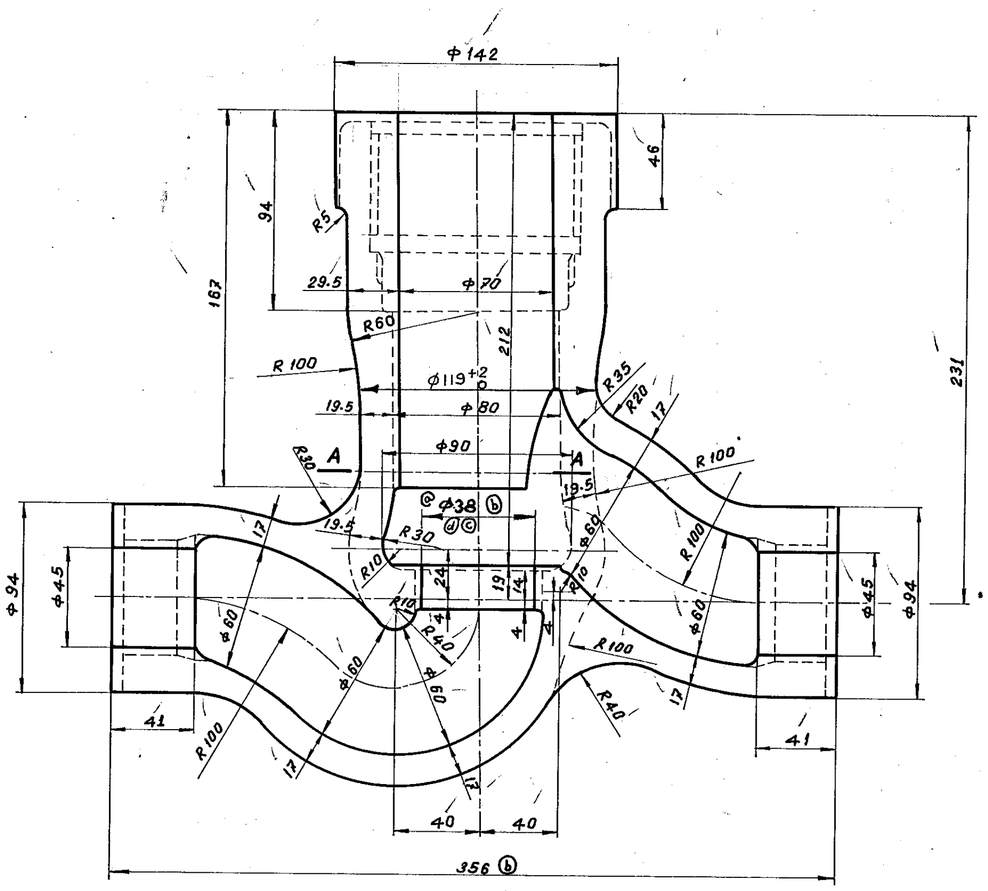

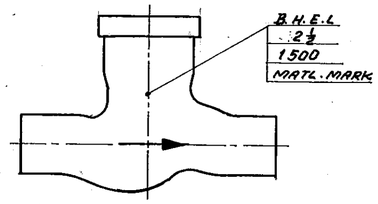

NOTES:-

1. DOTTED LINES SHOWS FINISH MACHINED CONFIGURATION.
2. FOR ALL OTHER DETAILS LIKE DIMENSIONAL TOLERANCE, PUNCHING DETAILS AND EMBOSSING ETC REF LATEST APPLICABLE TDC.
3. * FOR THESE SPECIAL CLASS VALVE EMBOSSING SHALL BE 1500 SPL.
4. * ALL THE SPECIAL CLASS CASTINGS ARE TO BE SUBJECTED RT/UT ON ALL CRITICAL LOCATIONS
5. * ALL EXTERIOR AND ACCESSIBLE INTERIOR SURFACE OF BODY SHALL BE MPI/LPI TESTED.

SL. No.	DRG. No.	MATL. SPECN.	MATL. CODE	MATL. MARK
* 8	2-V-G052-15104R/5	A 217 WC9, ATTEST, NT	92 150 287	WC9
* 7	2-V-G051-15104R/5	A217 WC6, ATTEST, NT	92 150 288	WC6
* 6	2-V-G050-15104R/5	A216 WCC, ATTEST, AN	92 150 289	WCC
* 5	2-V-G049-15104R/5	A216 WCB, ATTEST, AN	92 150 290	WCB
4	2-V-G044-15104R/5	A217 WC9, ATTEST, NT	92 150 291	WC9
3	2-V-G043-15104R/5	A217 WC6, ATTEST, NT	92 150 292	WC6
2	2-V-G042-15104R/5	A216 WCC, ATTEST, AN	92 150 293	WCC
1	2-V-G041-15104R/5	A216 WCB, ATTEST, AN	92 150 294	WCB

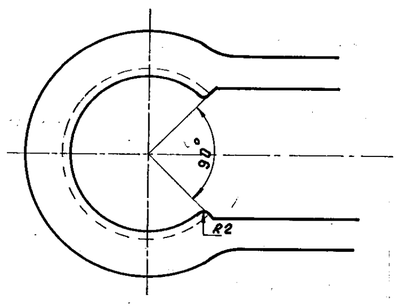

SECTION-AA

REV	DATE	ALTRD	REV.	DATE	ALT. R.L.	REV.	DATE	ALT. R.L.	REV	DATE	ALTRD:	REV	DATE	ALTERED	ZONE
05	29.12.94	CHED M.R.K.	04	18.5.89	CHE. V.B.	03	27.3.89	CHE.	02	07-02-86	CHD :	01	17.7.85	CHECKED	@
NOTES MODIFIED IN LINE WITH LATESTTDC. DCN NO: TA0441			@ DIM. Φ38 WAS Φ23. DCN No. 7A0078			© DIM. Φ38 CHANGED TO Φ23 TO UNIFY WITH REG. NEEDLE BODY DRG. No. 3-E31663 (2199).			ⓑ OVERALL LENGTH 354 CHANGED TO 356 AND Φ50 CHANGED TO Φ38 TO UNIFY WITH REG. NEEDLE BODY DRG. No. 3-E 28263 (1351)				SEAT BORE Φ50 ADDED.		

TYPE OF PRODUCT OR NAME OF CUSTOMER/PROJECT

XCI

MF 750160

Bharat Heavy Electricals Ltd.,
BOILER PLANT UNIT
TIRUCHIRAPALLI-620 014

	NAME	SIGN	DATE	NO. OF VAR
DRN	P.Nalaraja		8/1/85	
CHD	M.R.K.	M.	9/1/85	
APPD	V. BABU			

DEPT	GRADE OF UNTOL. DIM	SCALE	WEIGHT (kg)	REF. TO ASSY / OLD DRG	ITEM NO.
VL	f/M/f	N.T.S	30,0	3-E31663 (2199) 3-E 27160 (869) 3-E 28263 (1351)	
CODE 320					

TITLE	CARD CODE	DRAWING NO.	REV
BODY A 3126 B-6 & 3426 B-6 2½" 1500 CLASS	U 01	REF TABLE 2-V-0000-15104R	5

Size A2

TP-DG-2-V-0000-15107R
CORPORATE DRG ID

FIRST ANGLE PROJECTION (ALL DIMENSIONS IN MILLIMETRES)

CAUTION THE INFORMATION ON THIS DOCUMENT IS THE PROPERTY OF BHARAT HEAVY ELECTRICALS LTD. IT MUST NOT BE USED DIRECTLY OR INDIRECTLY IN ANY WAY DETRIMENTAL TO THE INTEREST OF THE COMPANY.

DRAWING No. 2-V-0000-15107R/1

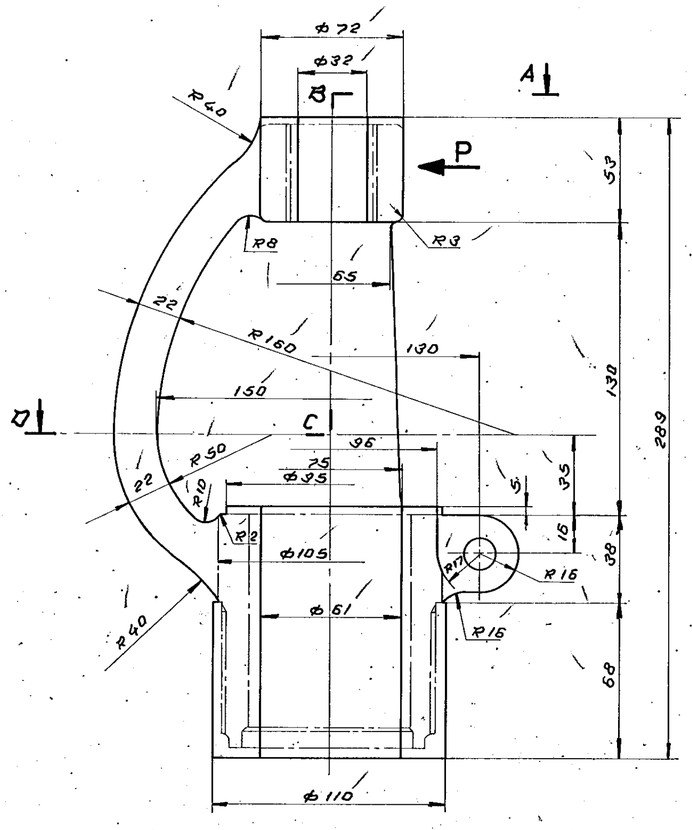

VIEW-P (DETAILS TO BE CAST)

MATL. MARK
2½ - 1500

NOTE :-

1. DOTTED LINES SHOWN FINISH MACHINED CONFIGURATION.
2. FOR ALL OTHER DETAILS LIKE DIMENSIONAL TOLERANCE, EMBOSSING ETC. REFER LATEST APPLICABLE T.D.C.

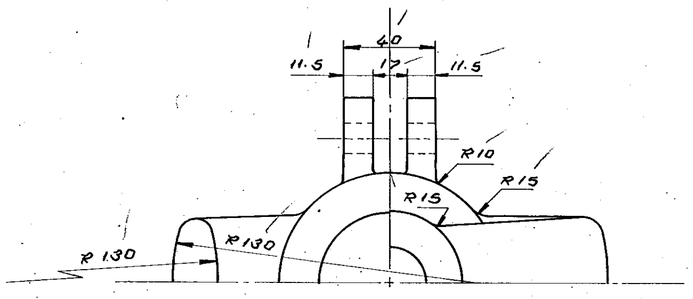

SECTION-ABCD

MF 759179

SL.No	DRG No.	MATL. SPECN.	MATL. CODE	MATL. MARK
2	2-V-G043-15107R/1	A217 WC6, NT, PRODUCT ATTEST	92 150 298	WC6
1	2-V-G041-15107R/1	A216 WCB, AN, PRODUCT ATTEST	92 150 297	WCB

Bharat Heavy Electricals Ltd., BOILER PLANT UNIT TIRUCHIRAPALLI-620 014

	NAME	SIGN	DATE
DRN	K.R. LEON		14-1-85
CHD	M.R.L.		6/2/85
APPD	V. BABU		6.2.85

NO. OF VAR

REV	DATE	ALTERED	CHECKED
01	5-12-94		

ZONE

NOTE NO. 2 MODIFIED.

DCN NO: TA 0425

DEPT: VL
CODE: 320
GRADE OF UNTOL. DIM: C/M/R
SCALE: NTS
WEIGHT (kg): 12.0
REF TO TDA DRG: B-E 27161 [B74]
ITEM NO.

TITLE: YOKE
A9126 -6 [65/1500C]

CARD CODE: U 01

DRAWING NO. 2-V-0000-15107R

REV 1

Size A2

TP-DG-2-V-0000-15107R
CORPORATE DRG ID

TP-DG-2-V-0000-15117R
CORPORATE DRG ID

FIRST ANGLE PROJECTION (ALL DIMENSIONS IN MILLIMETRES)

CAUTION THE INFORMATION ON THIS DOCUMENT IS THE PROPERTY OF BHARAT HEAVY ELECTRICALS LTD. IT MUST NOT BE USED DIRECTLY OR INDIRECTLY IN ANY WAY DETRIMENTAL TO THE INTEREST OF THE COMPANY.

DRAWING No. 2-V-0000-15117R/02

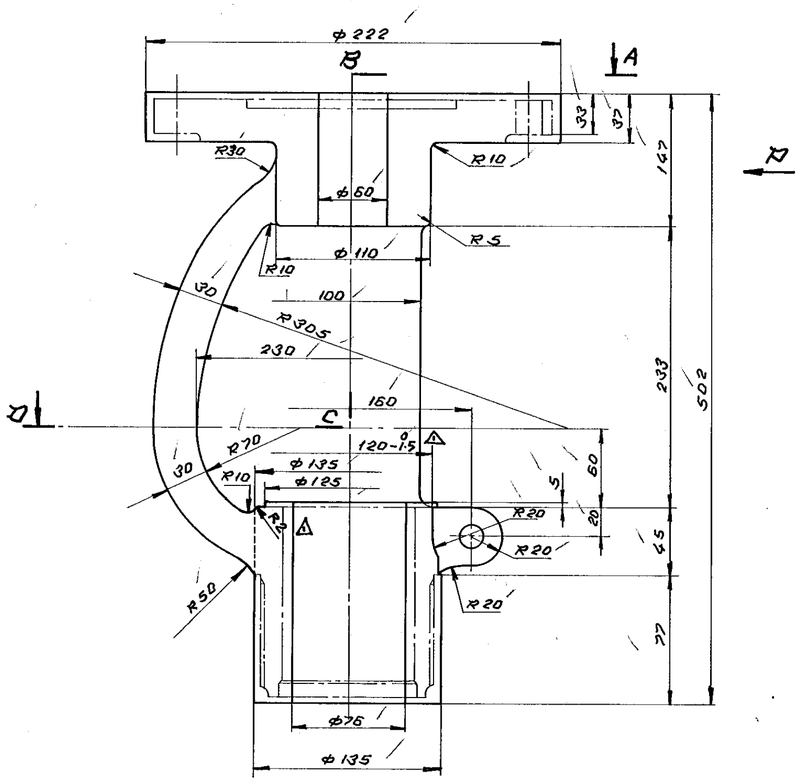

VIEW-D [DETAILS TO BE CAST]

MATL. MARK

4-1590

NOTES:-

1. CHAIN LINES SHOWS FINISH MACHINED CONFIGURATION.
2. FOR ALL OTHER DETAILS LIKE DIMENSIONAL TOLERANCE, EMBOSSING, ETC REFER LATEST APPLICABLE TDC.

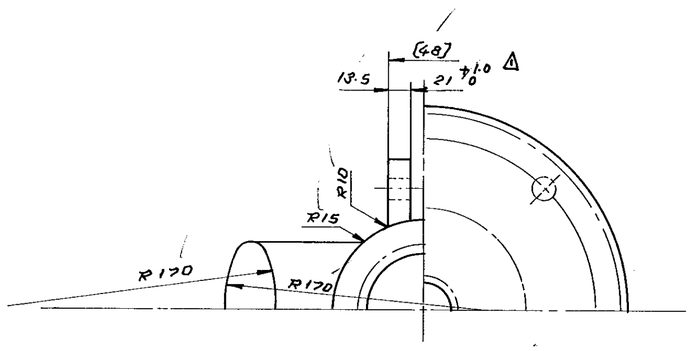

SECTION-ABCD

MF 759176

SL. No.	DRG No.	MATL. SPECN.	MATL. CODE	MATL. MARK
2	2-V-6075-15117R/02	A 217 WC6, NT, PRODUCT ATTEST	92 150 452	WC6
1	2-V-6073-15117R/02	A 216 WCB, AN, PRODUCT ATTEST	92 150 451	WCB

Bharat Heavy Electricals Ltd., BOILER PLANT UNIT TIRUCHIRAPALLI-620 014

	NAME	SIGN	DATE
DRN	K. SEEN		9-1-85
CHD			6/2/85
APPD			9/2/85

NO. OF VAR

REV	DATE	ALTD:	REV	DATE	ALTERED K.R.S
02	5.12.94	CHKD: MKR	01	25.9.89	CHECKED V.B

NOTE NO. 2 MODIFIED.

DCN NO: TA.0425

ZONE 4: DIMENSIONS 120 -0.5 -1.5 AND 21 +1.0 -0 WAS 120 AND 21. DIMENSION R2 INCLUDED. DCN. NO. TA 0109

DEPT	GRADE OF UNTOL. DIM	SCALE	WEIGHT (kg)	REF TO ASSY / OLD DRG	ITEM NO.
VL	g/M/f	NTS	35.5	3-E 27259 (1172)	
CODE 320					

TITLE: YOKE SMB-0 [100/1500 CLASS] A3126-10

CARD. CODE: U 01

DRAWING NO. 2-V-0000-15117R

REV. 02

Size A2

TP-DG-2-V-0000-15117R
CORPORATE DRG ID

TP-DG-2-V-0000-15120R
CORPORATE DRG ID

FIRST ANGLE PROJECTION (ALL DIMENSIONS IN MILLIMETRES)

DRAWING NO. REF. TABLE 2-V-0000-15120 R/2

CAUTION THE INFORMATION ON THIS DOCUMENT IS THE PROPERTY OF BHARAT HEAVY ELECTRICALS LTD., IT MUST NOT BE USED DIRECTLY OR INDIRECTLY IN ANY WAY DETRIMENTAL TO THE INTEREST OF THE COMPANY.

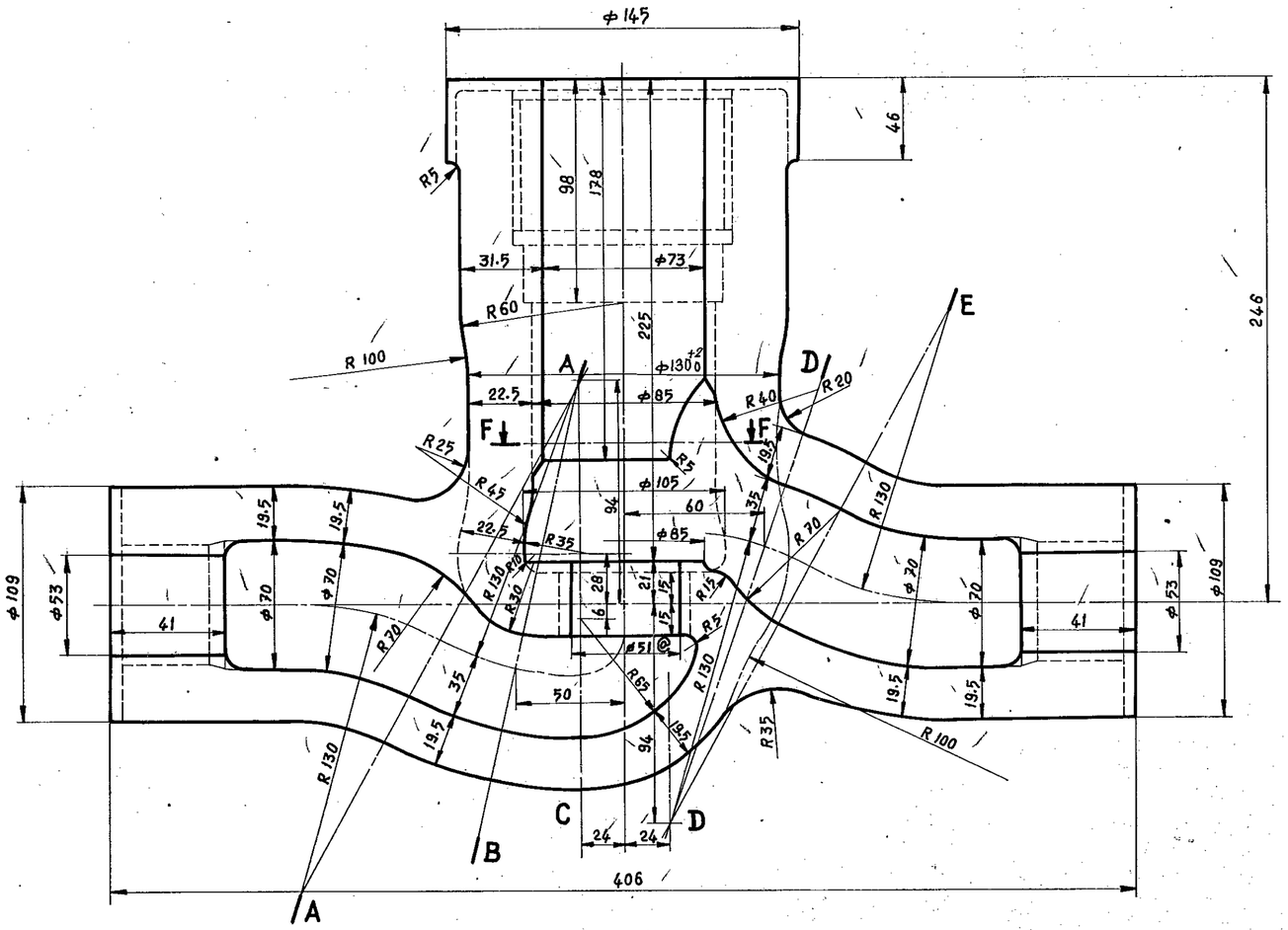

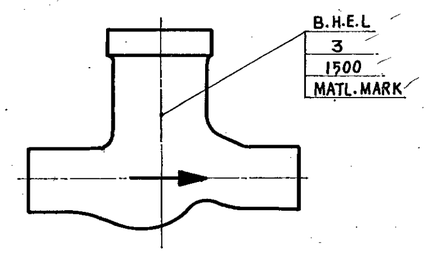

SECTION-FF

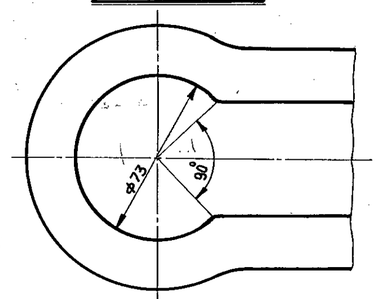

NOTES :-

1. ★ ALL THE SPECIAL CLASS CASTINGS ARE TO BE SUBJECTED RT/UT ON ALL CRITICAL LOCATIONS.
2. ★ ALL EXTERIOR AND ACCESSIBLE INTERIOR SURFACES OF BODY SHALL BE MPI/LPI TESTED.
3. DOTTED LINES SHOWS FINISH MACHINED CONFIGURATION
4. FOR ALL OTHER DETAILS LIKE DIMENSIONAL TOLERANCE, EMBOSSING, PUNCHING DETAILS ETC. REFER LATEST APPLICABLE TDC
5. ★ FOR THESE SPECIAL CLASS EMBOSSING SHALL BE '1500 SPL'

789175

Sl.No	DRAWING No.	MATERIAL SPECN.	MATL. CODE	MATL. MARK
8.★	2-V-G056-15120 R/2	A 217 WC9, ATTEST, NT	92 150 482	WC9
7.★	2-V-G055-15120 R/2	A 217 WC6, ATTEST, NT	92 150 481	WC6
6.★	2-V-G054-15120 R/2	A 216 WCC, ATTEST, AN	92 150 480	WCC
5.★	2-V-G053-15120 R/2	A 216 WCB, ATTEST, AN	92 150 479	WCB
4.	2-V-G048-15120 R/2	A 217 WC9, ATTEST, NT	92 150 478	WC9
3.	2-V-G047-15120 R/2	A 217 WC6, ATTEST, NT	92 150 477	WC6
2.	2-V-G046-15120 R/2	A 216 WCC, ATTEST, AN	92 150 476	WCC
1.	2-V-G045-15120 R/2	A 216 WCB, ATTEST, AN	92 150 475	WCB

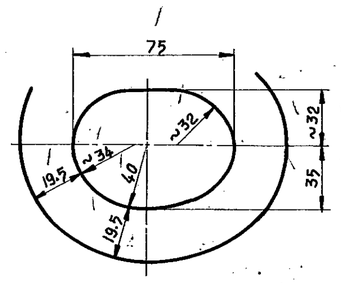

SECTION-AA

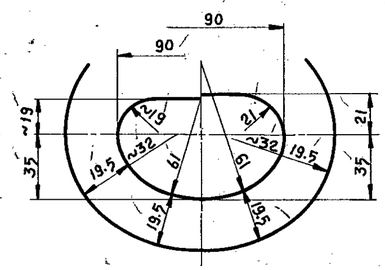

SECTION-BA SECTION CA

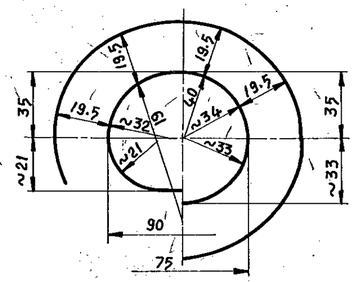

SECTION-DD SECTION-DE

REV	DATE	ALTD	CHKD
2	29.12.94		MRK

NOTES MODIFIED IN LINE WITH LATEST TDC

DCN NO: TA 0441

REV.	DATE	ALTERED	CHECKED
01	07-02-86	MRK	VB

ZONE @ — φ58 CHANGED TO φ51 TO UNIFY WITH REG. NEEDLE BODY DRG. No. 3-E 28267 (1383)

05-228/B

BHARAT HEAVY ELECTRICALS LTD.,
BOILER PLANT UNIT, TIRUCHIRAPALLI-620 014

DEPT	CODE	SCALE	WEIGHT (KG)	REF.	IT NO.
VL	320	NTS	345.0	3-E29191 (887) 3-E28267 (1383)	

TITLE: BODY

A 3126 B-8 & 3426 B-8 (3" 1500 CLASS)

	NAME	SIGN	DATE
DRAWN	K.N.C		13/2/85
CHECKED	M.R.K		14/2/85
APPROVED	V.BABU		14/2/85

DIMENSIONS TO BE CONTROLLED WITHIN LIMITS AS SHOWN. MACHINING TOLERANCE ±0.25 mm UNLESS OTHERWISE SHOWN NON-MACHINING TOLERANCE ±

CARD CODE U01

DRAWING NO. REF. TABLE 2-V-0000-15120 R 2

TP-DG-2-V-0000-15120R
CORPORATE DRG ID

TP-DG-2-V-0000-15302R
CORPORATE DRG ID

FIRST ANGLE PROJECTION (ALL DIMENSIONS IN MILLIMETRES)

CAUTION THE INFORMATION ON THIS DOCUMENT IS THE PROPERTY OF BHARAT HEAVY ELECTRICALS LTD. IT MUST NOT BE USED DIRECTLY OR INDIRECTLY IN ANY WAY DETRIMENTAL TO THE INTEREST OF THE COMPANY.

DRAWING No. 2-V-0000-15302R/1

05-228/C

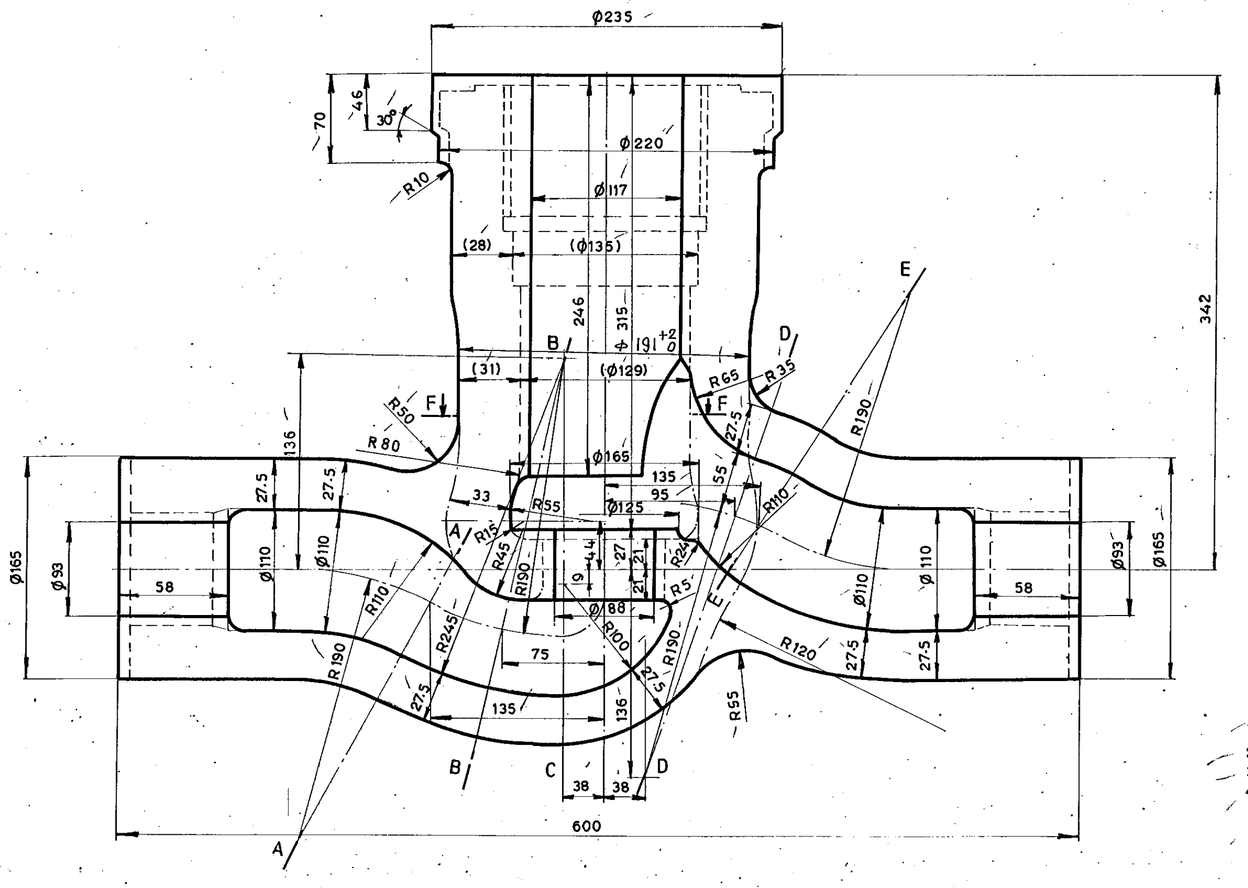

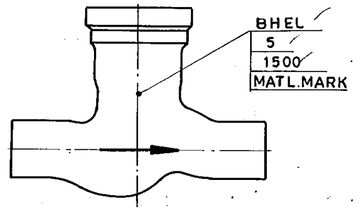

SECTION-FF

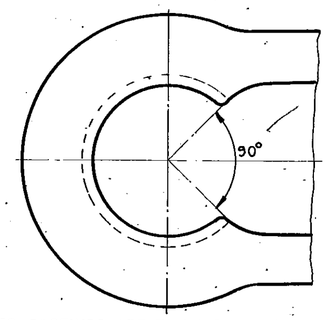

NOTE:-

1. * ALL THE SPECIAL CLASS CASTINGS ARE TO BE SUBJECTED RT/UT ON ALL CRITICAL LOCATIONS.
2. * ALL EXTERIOR AND ACCESSIBLE INTERIOR SURFACES OF BODY SHALL BE MPI/LPI TESTED.
3. DOTTED LINES SHOWS FINISH MACHINED CONFIGURATION.
4. FOR ALL OTHER DETAILS LIKE DIMENSIONAL TOLERANCE, PUNCHING DETAILS AND EMBOSSING ETC. REFER LATEST APPLICABLE TDC.
5. * FOR THESE SPECIAL CLASS VALVES EMBOSSING SHALL BE '1500 SPL'

MT

10716463

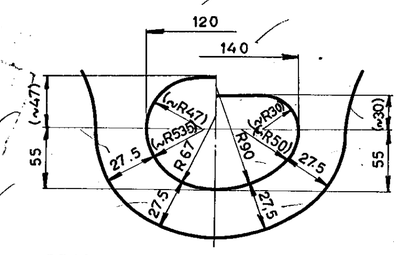

SECTION - AA SECTION - BB

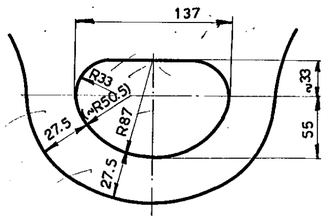

SECTION - BC

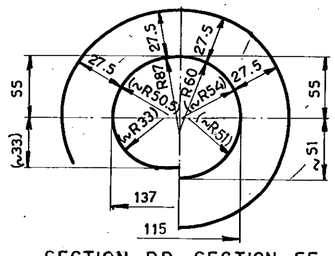

SECTION - DD SECTION - EE

SL.NO.	DRG. NO.	MATL. SPECN	MATL CODE	MATL. MARK
8 *	2 - V - R072 - 15302 R/1	A 217 WC9, ATTEST, NT.	92 151 105	WC 9
7 *	2 - V - R071 - 15302 R/1	A 217 WC6, ATTEST, NT.	92 151 104	WC 6
6 *	2 - V - R070 - 15302 R/1	A 216 WCC, ATTEST, AN.	92 151 103	WCC
5 *	2 - V - R069 - 15302 R/1	A 216 WCB, ATTEST, AN.	92 151 102	WCB
4	2 - V - R068 - 15302 R/1	A 217 WC9, ATTEST, NT.	92 151 101	WC9
3	2 - V - R067 - 15302 R/1	A 217 WC6, ATTEST, NT.	92 151 100	WC6
2	2 - V - R066 - 15302 R/1	A 216 WCC, ATTEST, AN.	92 151 099	WCC
1	2 - V - R065 - 15302 R/1	A 216 WCB, ATTEST, AN.	92 151 098	WCB

Bharat Heavy Electricals Ltd.,
BOILER PLANT UNIT
TIRUCHIRAPALLI-620 014

	NAME	SIGN	DATE
DRN		EC005	
CHD	MRK		18/9/87
APPD	VB		

NO. OF VAR

REV	DATE	ALTERED	CHECKED
01	29.12.94		MRK

ZONE

NOTES MODIFIED IN LINE WITH LATEST TDC

DCN NO: TA 0441

DEPT VL
CODE 320
GRADE OF UNTOL. DIM C/M/F
SCALE NTS
WEIGHT (kg) 101.0
TOA DRG NO. 3-E31291 (1564)
ITEM NO.

TITLE BODY
3426-B-13 125mm/1500 CLASS
CARD CODE U 01
DRAWING NO. REF.TABLE 2-V-0000-15302R
REV 1

Size A2

TP-DG-2-V-0000-15302R
CORPORATE DRG ID

TP-DG-2-V-0000-15356R
CORPORATE DRG ID

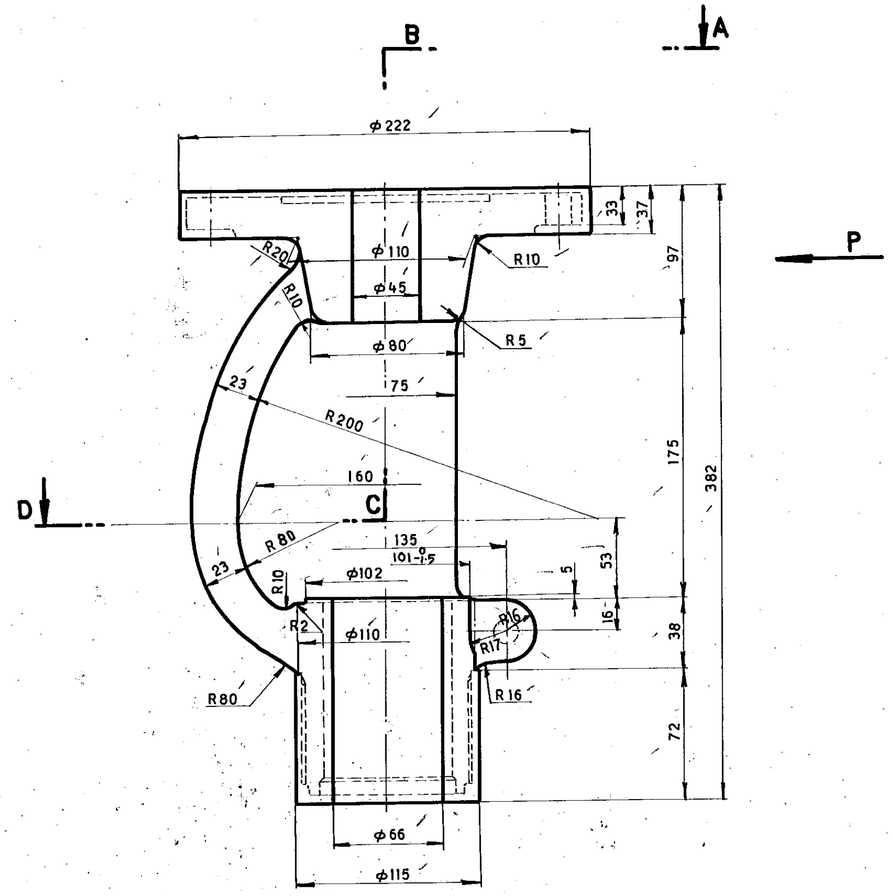

VIEW-P (DETAILS TO BE CAST)

MATL. MARK
3-1500

NOTE:-

1. DOTTED LINES SHOWS FINISH MACHINED CONFIGURATION.
2. FOR ALL OTHER DETAILS LIKE DIMENSIONAL TOLERANCE EMBOSSING ETC. REFER LATEST APPLICABLE TDC.

SECTION - ABCD

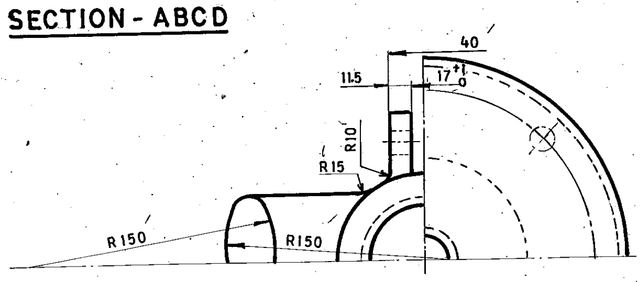

MF
107615

SL. NO.	DRG. NO.	MATL. SPECN	MATL. CODE	MATL. MARK
2	2-V-G067-15356 R/01	A217 WC6, PRODUCT ATTEST	92 151 205	WC 6
1	2-V-G065-15356 R/01	A 216 WCB, PRODUCT, ATT	92 151 204	WCB

BHARAT HEAVY ELECTRICALS LTD.,
BOILER PLANT UNIT, TIRUCHIRAPALLI-14

FIRST ANGLE	SCALE N·T·S	DRAWN	EC 005	TOTAL NET WT.(KG)	19.1
		CHECKED	K.R.SEKAR	TYPE	
		APPROVED	V.BABU	TOA DRG.NO.	3-E27288 (1136)
ALL DIMENSIONS IN MILLIMETRES		DATE	10.8.87	NEW/OLD DRG. NO.	

CAUTION
THE INFORMATION CONTAINED IN THIS DRAWING IS THE PROPERTY OF BHARAT HEAVY ELECTRICALS LTD., BOILER PLANT UNIT. TIRUCHY-14 AND SHALL NOT BE USED WITHOUT THEIR EXPRESS WRITTEN PERMISSION IN ANY FORM OR PART THEREOF FOR ANY OTHER PURPOSE THAN FOR WHICH IT IS SENT TO YOU.

3.3-114

TITLE: YOKE (SMB-0)
A3126B-8L (3/1500C)

DRAWING NO. 2-V-0000-15356R
REVISION 01

REV.	DATE	ALTERED	CHECKED
01	5.12.94		

ZONE: NOTE NO.2 MODIFIED.
DCN NO: TA 0425

TP-DG-2-V-0000-15356R
CORPORATE DRG ID

TP-DG-2-V-R065-15287R
CORPORATE DRG ID

FIRST ANGLE PROJECTION (ALL DIMENSIONS IN MILLIMETRES)

CAUTION THE INFORMATION ON THIS DOCUMENT IS THE PROPERTY OF BHARAT HEAVY ELECTRICALS LTD. IT MUST NOT BE USED DIRECTLY OR INDIRECTLY IN ANY WAY DETRIMENTAL TO THE INTEREST OF THE COMPANY.

05-228/C

DRAWING NO. 2-V-R065-15287R/1

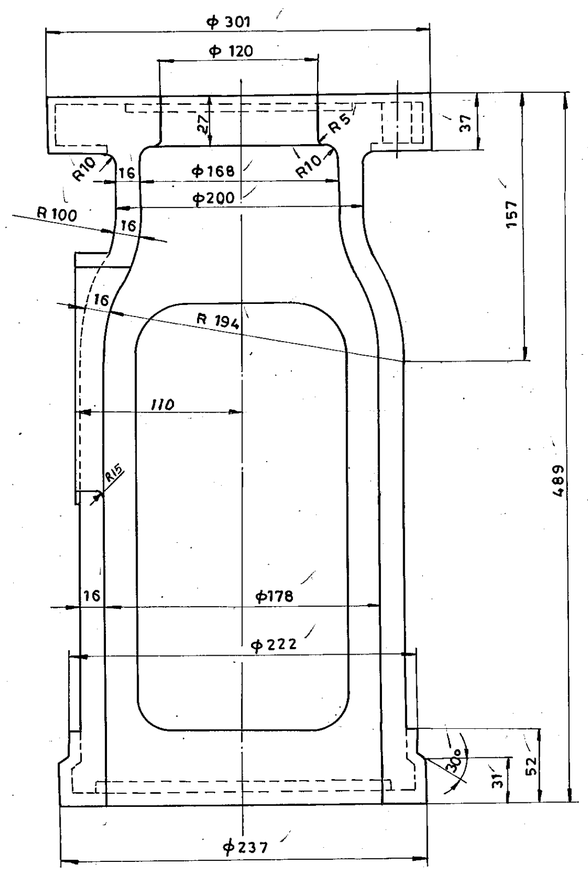

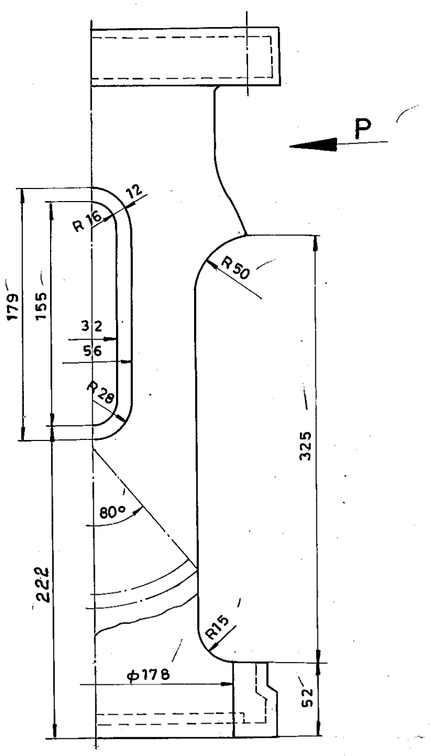

VIEW-P (DETAILS TO BE CAST)

5 - 1500
WCB

NOTE :-

1. DOTTED LINES SHOWS FINISH MACHINED CONFIGURATION
2. FOR ALL OTHER DETAILS LIKE DIMENSIONAL TOLERANCE EMBOSSING ETC. REFER LATEST APPLICABLE TDC.

1076477

SL. NO	DRAWING NUMBER	MATL. SPECN	MATL. CODE
1.	2-V-R065-15287R/1	A 216-WCB, AN, CERTIFY	92 151 014

TYPE OF PRODUCT OR NAME OF CUSTOMER/PROJECT

Bharat Heavy Electricals Ltd.,
BOILER PLANT UNIT
TIRUCHIRAPALLI-620 014

	NAME	SIGN	DATE	NO. OF VAR
DRN		EC 005		
CHD	M.R.K.			
APPD	V.B			

REV	DATE	ALTERED	CHECKED
01	5.12.94		M.R.K.

ZONE

NOTE NO-2 MODIFIED.

DCN NO: TA 04-25

DEPT	GRADE OF UNTOL. DIM	SCALE	WEIGHT (kg)	REF TO ASSY / OLD DRG	ITEM NO.
VL / CODE 320	C/M/F	N.T.S	39.0	3.E31292	

TITLE: YOKE BA1 (125 / 1500 C) 3426 B - 13

CARD CODE: U 01

DRAWING NO.: 2-V-R065-15287R

REV: 1

Size A2

EC - 012

TP-DG-2-V-R065-15287R
CORPORATE DRG ID

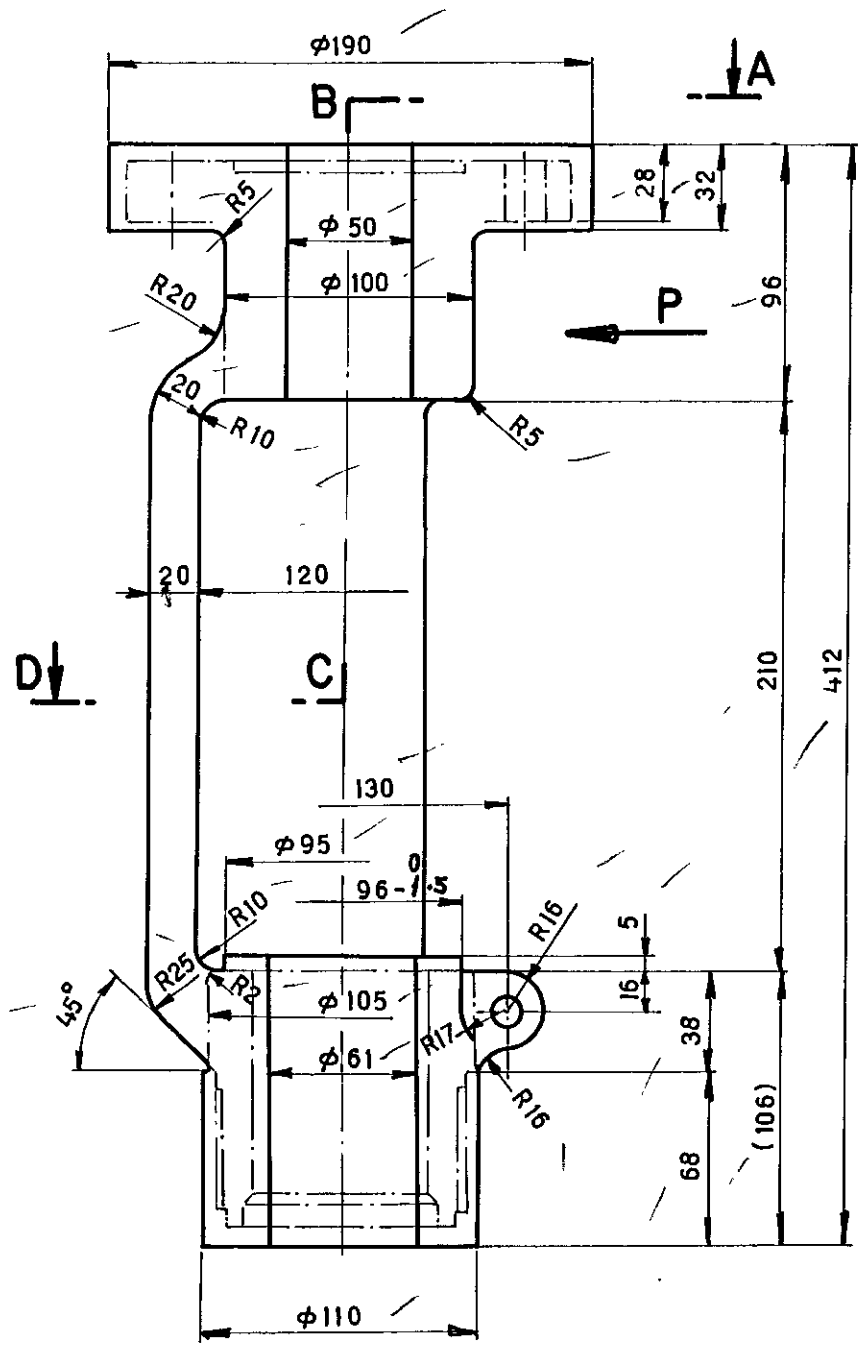

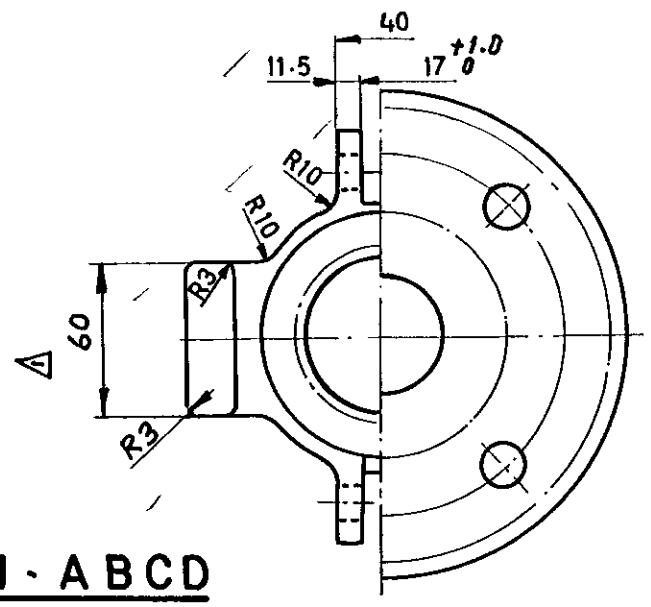

SECTION - ABCD

(16)

VIEW - P (DETAILS TO BE CAST)

MATL. MARK

2½ - 1500

NOTE:-

1. ONE DOT CHAIN LINES SHOWS FINISH MACHINED CONFIGURATION.
2. FOR ALL OTHER DETAILS LIKE DIMENSIONAL TOLERANCE, EMBOSSING ETC. REFER LATEST *APPLICABLE QUALITY PROCEDURE*.

SL.NO.	DRAWING NUMBER	MATL. SPECN.	MATL. CODE	MATL.MARK
2	3-V-R091-20512R/02	A 217 - WC6, NT, PRODUCT ATTEST	92 151 285	WC6
1	3-V-R089-20512R/02	A 216 WCB, AN, PRODUCT ATTEST	92 151 284	WCB

REV.	DATE	
02	26.8.96	ALT. R.L. CHE.&APPD. M.R.K.

NOTE-2 UPDATED.
DCN No. TA 0672

REV	DATE	
01	12.12.89	ALTERED K.R.S. CHECKED V.B

ZONE — WEB WIDTH 60 SHOWN IN SECTION ABCD
DCN NO TA 0117

BHARAT HEAVY ELECTRICALS LTD.,
BOILER PLANT UNIT, TIRUCHIRAPALLI-14

FIRST ANGLE	SCALE: NTS	DRAWN	R.L.	TOTAL NET WT. (kg): 16.0
		CHECKED	M.R.K.	TYPE:
		APPROVED	V.B	
ALL DIMENSIONS IN MILLIMETRES		DATE	13/5/89	NEW/OLD DRG. NO: 3-E 39118 (2233)

TITLE: YOKE

DRAWING NO: 3-V-0000-20512R

REVISION: 02

CAUTION
THE INFORMATION CONTAINED IN THIS DRAWING IS THE PROPERTY OF BHARAT HEAVY ELECTRICALS LTD., BOILER PLANT UNIT, TIRUCHY-14 AND SHALL NOT BE USED WITHOUT THEIR EXPRESS WRITTEN PERMISSION IN ANY FORM OR PART THEREOF FOR ANY OTHER PURPOSE THAN FOR WHICH IT IS SENT TO YOU.

33-115

CORPORATE DRG ID
TP-DG-3-V-0000-20512R

CORPORATE DRG ID
TP-DG-3-V-0000-20512R

FIRST ANGLE PROJECTION (ALL DIMENSIONS IN MILLIMETRES)

05-229 / C

CAUTION THE INFORMATION ON THIS DOCUMENT IS THE PROPERTY OF BHARAT HEAVY ELECTRICALS LTD. IT MUST NOT BE USED DIRECTLY OR INDIRECTLY IN ANY WAY DETRIMENTAL TO THE INTEREST OF THE COMPANY.

9

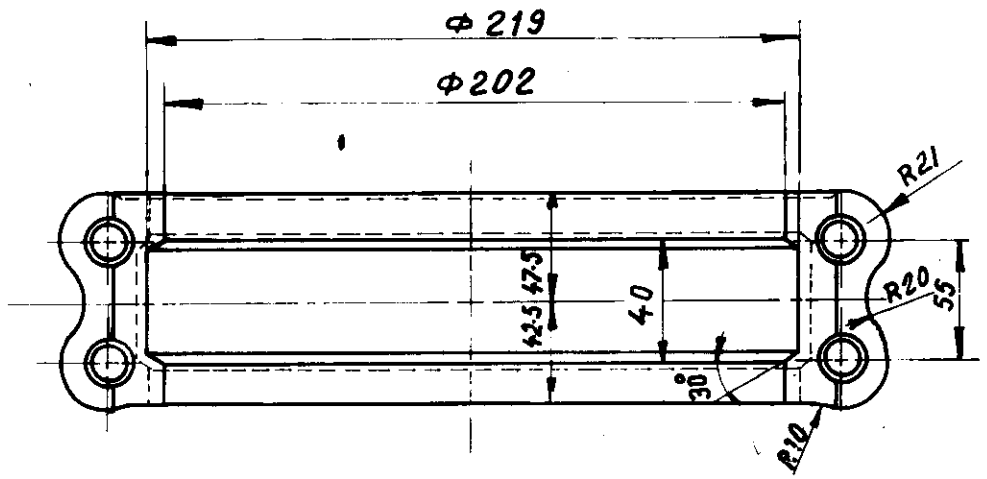

SECTION-AA

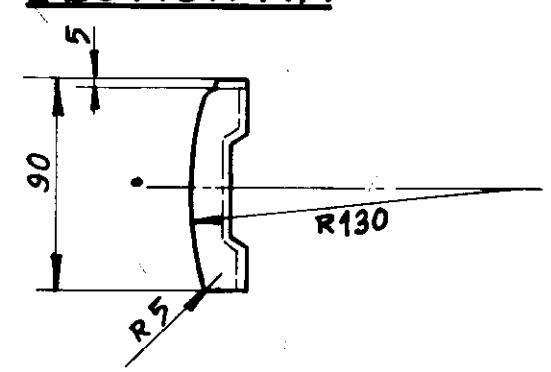

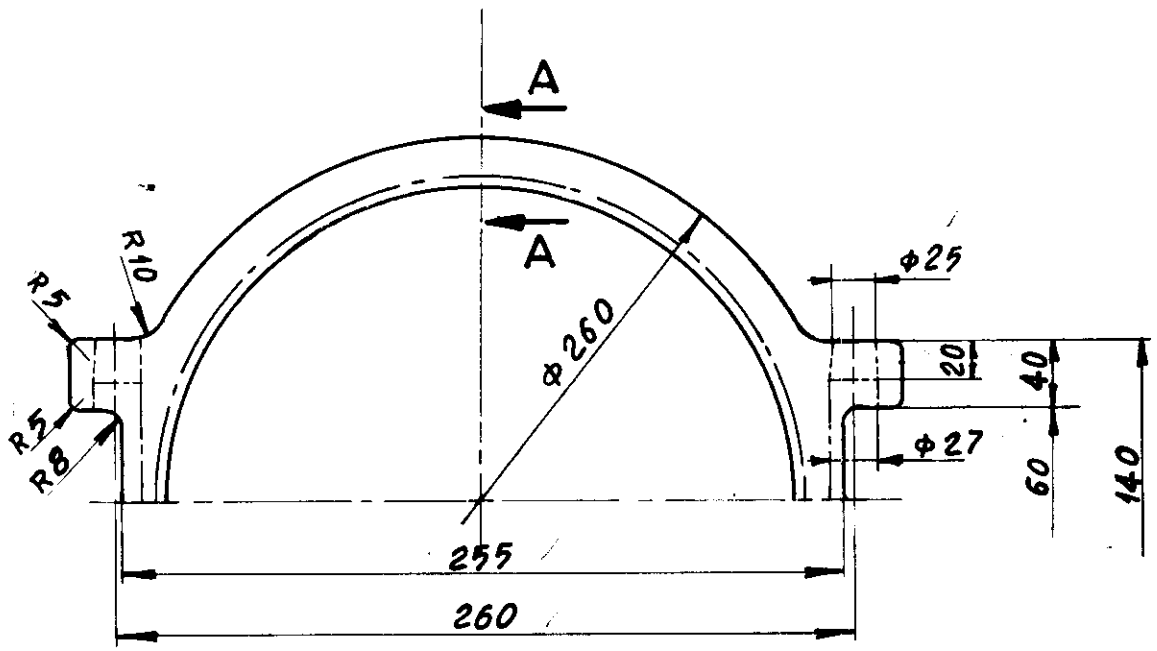

NOTE

1. DOTTED LINES SHOWS FINISH MACHINED CONFIGURATION
2. FOR ALL OTHER DETAILS LIKE DIMENSIONAL TOLERANCE, ETC. REFER LATEST APPLICABLE QUALITY PROCEDURE
3. TWO YOKE CLAMPS TO BE MADE AS A SINGLE PIECE.

SL NO.	DRAWING NO.	MATERIAL SPECN.	MATL. CODE	MATL. MARK TO BE PUNCHED
1		A216 WCB, CERTIFY, AN	92151108 0000	WCB

TYPE OF PRODUCT OR NAME OF CUSTOMER/PROJECT

Bharat Heavy Electricals Ltd.,
BOILER PLANT UNIT
TIRUCHIRAPALLI-620 014

	NAME	SIGN	DATE	NO. OF VAR
DRN	K. R. S		8-12	
CHD	M. Rajkumar			
APPD	S. Kumar			

REV	DATE	ALTERED / CHECKED & APP.
01	26.8.96	R.L. / M.R.K.

NOTE 2 UPDATED.
DCN No. TA 0672

DEPT: VL
CODE 320
GRADE OF UNTOL DIM
SCALE NTS
WEIGHT (kg) 12.0
TBA REF DRG. 4-E66225 (1554)
ITEM NO.

TITLE: YOKE CLAMP
CARD CODE U 01
DRAWING NO. 3-V-R065-20386R
REV 01

Size A3

CORPORATE DRG ID TP-DG-3-V-R065-20386R

CORPORATE DRG ID TP-DG-3-V-R065-20386R

Revisions record:

Rev. 21 – 1) Cl 8 – requirements of test bar added. 2) Cl 7 Table 1 – SV, SRV and QC NRV RT quantum for body casting modified. 3) Isolating valve, product name modified. 4) Cl 8 a) clarity on need for re qualification of castings added. 5) Cl 12 modified to include drawing details, 6) Cl 13.4 A – clarity to submit IBR certificate and MTC added.

Rev. 22- Dt: 26/06/2014 1) Cl 7.0 Table 1 –RT area of QCNRV body revised. 2) Cl.8.0 a) Modified. 3) Sketch of Zones of RT – RT zones of SV and SRV base castings modified based on Engineering review.

Rev. 23 Dt: 06/10/2015: Cl. 2, 4, 5, 6, 7, 8, 13, 15 modified to incorporate API 6D 24th Edition requirements.

Rev 24 Dt: 23/12/2015: Cl 1, 2, 3,5, 6, 7, 8, 9, 10, 13, 14 & 15 modified.

Rev: 25 Dt: 11/02/2017: Cl 1 changed to indicate the use of latest revisions of referred codes, standards, specifications, drawings, procedures, etc; Requirements of API 6D removed from Cl 2, 4, 5, 7, 13 & 15 since the API 6D certificate license was not applied for; Definitions for relevant, linear and rounded indications provided in Cl 7; Cl 2 to 10, 12, 13 & 15 revised to bring better clarity; Type 3.2 certification updated as per BS EN 10204-2004 in Cl 13.2.

Rev: 26 : Dt – 21/02/2018 - SA/ASTM A 995 Gr 4A (CD3MN) added in Cl 1 & 5 based on Engineering/Valves input; Creep testing requirements removed and referred to SIP:RM:01.

1. MATERIAL SPECIFICATIONS:

All the codes, standards, specifications, drawings & procedures, etc., referred in this TDC shall be of latest revision as on the date of Enquiry/Purchase Order, whichever is earlier, unless specified otherwise.

Carbon Steel (CS)	:	SA / ASTM A216 WCB, WCC & 352 LCB, LCC
Alloy Steel (AS)	:	SA / ASTM A217 WC6, WC9, C12A.
Stainless Steel (SS)	:	SA / ASTM A351 CF3M, CF8, CF8C & CF8M; ***SA / ASTM 995 Gr. 4A(CD3MN)***
Additional Requirement	:	As listed below (Supplementary to above material specifications)
Size, Quantity, Grade/Class	:	As per Purchase Order & Drawing / Pattern.

2. CHEMICAL COMPOSITION AND PROCESS:

a) Melting: As per the Specification, Fully Killed.
Carbon= 0.25% maximum: for SA / ASTM A216 WCB only.
Carbon= 0.15% maximum: for SA / ASTM A217 WC6 & WC9 (For the castings used in QCNRV, CRHNRV, TOA Valves & Conventional valves having contours for welding).

Product Analysis on test bar for each melt including residual elements shall be carried out.

b) All raw materials used in steel making including incoming scrap shall be checked by supplier to ensure freedom from radioactivity. (Applicable for SS material only)

c) Tolerance for chemistry shall be as per the above applicable material specifications/standards specified in Cl 1.

3. DIMENSIONS AND TOLERANCES:

Dimensions & their tolerances shall be as per applicable drawings. For untoleranced dimensions: VL: STDC: 023.

4. HEAT TREATMENT (HT):

CS – Castings of High Pressure Valve. (Cl.1500 & above), QCNRV & CRHNRV: Shall be in Annealed Condition.
AS – Castings: Normalized and Tempered.
Normalizing Temperature: SA/ASTM A217 WC6, WC9: 920-950°C and for C12A: 1050-1080°C.
Tempering Temperature: SA/ASTM A217 WC6: 680°C min.; WC9: 720°C min.; C12A: 750-780°C.
All other materials: Heat treatment shall be as per the applicable material specification & grade.

5. MECHANICAL TESTS:

a) Test bars to be cast integral with the casting or separately. If cast separately, they shall be cast at the same time as the castings and from the same ladle. A metal strip with heat number stamped shall be fused with the test bar during casting, to maintain traceability.

If one (1) casting is made from more than one heat, separate test bars for each cast to be poured and all test bars shall satisfy the requirements. Tests mentioned in Table 1 shall be conducted per heat / Heat treatment batch, as per ASTM A370.

Perform tensile tests at room temperature in accordance with the procedures specified in ASTM A370. Perform a minimum of one tensile test. All yield strengths shall be determined using 0.2 % offset method of ASTM A370. The results of the tensile test(s) shall satisfy the applicable material specification requirements. Hardness testing shall be as per ASTM E10 or E18.

If the results of the tensile test(s) do not satisfy the applicable requirements, two additional tests on two additional test specimens (removed from the same TC with no additional heat treatment) may be performed in an effort to qualify the material. The results of each of these tests shall satisfy the applicable requirements.

Table 1.

No	TEST	MATERIAL SPECIFICATIONS			
		SA/ASTM A216, 217	**SA/ASTM A352**	**SA/ASTM A351**	***SA/ASTM A995***
1	Tension Test	As per the Material Specification			
2	Hardness Test	As per the Specification	225 HBW max.	Not applicable	***Not Applicable***
3	Bend Test Specimen 1" x ¾ "	WCB: Bend Angle 90^0, Dia of Pin 2t WCC: 90^0, 2t WC6: 120^0, 3t WC9: 90^0, 3t C12A: 90^0, 2t	Not applicable	S3 of SA703	***Not applicable***
4	Charpy- U Impact for all QCNRV, CRHNRV bodies for IBR.	As per IBR. At Room temperature. Acceptance: Avg /Single=36J/32J min.	Not applicable	Not applicable	***Not applicable***
5	Charpy- V Impact for CE Marking-Pressure Equipment Directive (PED) items as Specified in the Purchase Order.	At 20 Deg.C temperature. Acceptance:Avg/Single=40J/27J min.	As per Specification	Not applicable	***Not applicable***
6	Charpy- V Impact for LPBP bodies	At 20 Deg.C temperature. Acceptance: Avg/Single=27J/21J min.	Not applicable	Not applicable	***Not applicable***

b) ***Creep testing & reporting shall be carried out as per SIP:RM:01 (latest revision) whenever indicated in the Enquiry/Purchase Order/Engineering Drawing.***

6. FETTLING, DRESSING & CLEANING:

- Dressing of castings-Free from risers, in gates, notches, undercuts, deep marks etc.
- Fused wires, parting line fins, chills etc. shall be removed by grinding.
- Gas cutting if employed shall be done before Heat treatment.
- Preheat the material to 200^0C before gas cutting the Alloy steels.
- Castings shall be blast cleaned both inside and outside for the removal of fused sand, scales etc.
- Visual inspection: 100% as per MSS-SP:55. Acceptance: Type 1: none accepted; Type 2-12: A & B only accepted.

7. NON DESTRUCTIVE TESTING (NDT) AFTER HEAT TREATMENT

The NDE requirements for the castings shall meet the following as shown in Table-2 below. Castings shall be free from surface and internal defects like porosity, shrinkage, sand inclusion, crack, cold shut and other harmful defects. All castings shall be of Radiographic Quality.

1. Radiographic Testing Procedure (RT) : As per ASME B 16.34
2. Magnetic Particle Inspection (MPI) : As per ASTM E709
3. Liquid Penetrant Inspection (LPI) : As per ASTM E165

Table: 2

Product	Components	Characteristics	Type of NDE Check				
			RT	**RT Area**	**RT Acc. Std**	**MT $**	**MT Area**
Conventional Valves (Gate, Globe & Check)	Body, Bonnet Pr.part yoke, Cover	< 600 Class	10%#	ASME B 16.34 / On critical area as indicated in the Drawing.	As per Table: 3	--	--
	Body, Bonnet, Cover	600 Class & above	100%			--	
	Body, Bonnet, Cover	1500 Class & above	100%			100%	All accessible surfaces
	Wedge	All Special Class Valves	--	--	--	100%	

							including belly.
Safety Valve	Base	Flanged ends of All Castings	100%	Critical Zones as given in the Drawing/ area shown in the sketch **below**. The areas where RT cannot be carried out MPI shall be done.	Class 2 of ASTM E446 / E186. For Butt weld ends as per Table- 3	100%	All accessible surfaces
		Weld ends of All Castings	100%			--	--
Safety Relief Valve	Base	All	100%			--	--
	Bonnet		10%#				
	SRV Nozzle	All	100%	All area	Class-2 of ASTM E446 / E186.	--	--
QC NRV, CRH NRV	Body	150 & 300 Class	100%	Butt Weld Ends	As per Table: 3	100%	All accessible surfaces including belly.
		600 Class & above	100%	Critical Zones as given in the Drawing/ area shown in the sketch below. The areas where RT cannot be carried out MPI shall be done.	As per Table: 3	100%	
	Body (Special)	All					
Soot Blower Valve	Body	All	10%#	Critical Zones as given in the Drawing/ area shown in the sketch below. The areas where RT cannot be carried out MPI shall be done.	As per Table: 3	--	--
Isolating Valve/ device	Body	< 600 Class	100%	Critical Zones as given in the Drawing/ area shown in the sketch below. The areas where RT cannot be carried out MPI shall be done.	As per Table: 3	--	All accessible surfaces including belly.
		600 Class & above				--	
		1500 Class & above				100%	
LP Bypass Valve	Body	All	100%	Critical Zones as given in the Drawing/ area shown in the sketch below. The areas where RT cannot be carried out MPI shall be done.	As per Table: 3	--	--

$ LPI can be substituted for MPI in all inaccessible area and for stainless steel castings # Refer Cl 7.1

Table: 3

Type Of Discontinuity	**Acceptance Level Category**	**< 600 CLASS**		**≥ 600 CLASS**	
		Thickness ≤2"	**Thickness >2"**	**Thickness ≤2"**	**Thickness >2"**
Gas Porosity	A	A2	A3	A1	A2
Sand/Slag inclusion	B	B3	B3	B2	B2
Shrink Type-1	C	CA2	CA3	CA1	CA2
Shrink Type-2	C	CB3	CB3	CB2	CB2
Shrink Type-3	C	CC3	CC3	CC2	CC2
Crack	D	NONE	NONE	NONE	NONE
Hot Tear	E	NONE	NONE	NONE	NONE
Un-fused Inserts (Chills/Chaplets)	F	NONE	NONE	NONE	NONE

a. Butt welding ends shall be free of shrinkage, crack & hot tear.
b. For butt weld ends Gas hole/Porosity and sand inclusions to be within level A1 &B1 respectively

NDE for SS material: Castings shall be checked for radioactive contamination and reported. Survey meter shall be used to measure near the surface. Acceptance limits: Shall be less than 0.1 milli Rontgen (MR) per hour or 1 micro Sievert per hour.

7.1 # 10% Sampling shall be done as follows: (Wherever specified): The vendor shall select 10% of the Casting from the lot consisting of same size and type, (along with melt number / Sl.nos of the castings covered in the lot) for Radiography. A lot to be specified as the total number of castings as above, supplied in 4 months period (Jan-Apr, May-Aug, Sep-Dec). The vendor shall radiograph these specified castings and incorporate the lot size and meltno and Sl.no in the RT reports along with the other Sl.nos of the other castings covered in the lot.If the identified casting is defective then 2 more castings shall be radiographed.If these 2 castings are defect free then the lot is acceptable.If any one of these castings is defective then all the remaining castings shall be radiographed and all defective areas shall be repaired. BHEL will carry out audit on the lots at th vendor works at any time.

7.2 Surface NDE (MPI & LPI): Testing as per ASME B16.34.

1. **Relevant indication: Surface-rupture NDE indication with major dimensions > 1.6 mm (1/16 in).**
2. **Linear indication: Surface NDE indication whose length is ≥ three times its width.**
3. **Rounded indication: Surface NDE indication whose length is < three times its width.**
   Acceptance for MPI & LPI:
4. Cracks are not permitted.
5. For linear indications other than cracks, indications must be separated by a distance greater than the length of an acceptable indication. Maximum allowable length of the indication shall be:
   a) For thickness(t) up to 13mm= 8mm,
   b) For thickness from 13 to 25mm = 13mm
   c) For thickness above 25mm=18mm.
6. For rounded indications, 4 or more indications in a line separated by 1.5 mm or less edge to edge are unacceptable. Maximum allowable diameter of the indication shall be:
   a) For thickness up to 13mm =8mm
   b) For thickness above 13mm =13mm

8. DEVELOPMENT STAGE OF CASTING:

a) During developmental stage, of new castings or change to an existing casting on account of change in dimension which warrants pattern correction, Foundry to ensure, first sample pieces meet dimensional, NDE & Quality requiremnets in this TDC, before starting bulk production. Sample castings, 3 castings with nominal bore (NB) ≤ 100mm. & 1 casting with NB > 100 mm for each type shall be inspected for dimension and RT requirements at BHEL/Vendor works by BHEL personnel. One Test bar for each melt/heat treatment batch shall be supplied along with casting for test at BHEL. RT shall be carried out on entire area of the casting to the acceptance requirement of Table-2 & 3. In addition 100% MPI on all critical areas like change of sections, riser & in gate portions shall be carried out. Casting to be inspected for dimensions after proof machining wherever necessary. If machining operation is invloved the same shall be done and defect free condition shall be ensured. If any defect noticed in RT and machining, the type of defect shall be analyzed and accordingly size of gate, runner, riser and pouring methodolgy to be modified to get defect free casting. Sampling shall be continued till achieving sound casting. After satisfactory development of sampling bulk production shall be started. However weld repaired areas identified in visual examination for doubtful indications to be probed by MPI. Accepted sample castings may be considered for fixing the nominal weight of the castings.

b) During developmental stage RT on sample castings of Yoke, Yoke Clamp & Wedge/Disc shall meet Level-3 of ASTM E446/E186/E280.

c) Radiography not required after satisfactory development of casting & production based on established method for following parts: SRV Bonnet, Disc Holder,Upper and Lower adjusting rings, Packed cap, Cover Plate, Yoke and SRV guide flanges.

9. REPAIR:

Castings with unacceptable cracks, hot tears, shrinkage, etc. to be rectified by grinding & if required by welding. Welding to be done by qualified welder and qualified procedure as per ASME Section IX. For IBR items welders shall be qualified as per IBR.

Guidelines for repair of steel castings shall be as per SIP:VS:17 for activities like defects require/ not require weld repair, welding, Post Weld Heat Treatment, NDE and surface treatment. All repaired areas after PWHT shall be NDE tested and Hardness tested. Hardness shall meet material specification.

For PED (CE-Marking) castings, permanent joining (welding and weld repair) of components must be carried out by suitably qualified personnel according to suitable operating procedures. Also Non-Destructive tests of permanent joints must be carried out by suitable qualified personnel.

The procedures and personnel must be approved by a competent third party which at the manufacturer's discretion, may be - A notified body, - A third party organization recognized by a Member State of European Community.

10. SURFACE TREATMENT:

SS castings to be pickled & passivated (after repair & HT if any) as per ASTM A380. Satisfactory passivity of the surface to be checked using SS passivity test kit (Free iron test). After passivation, rinsing & test, the rinsed demineralised water to be checked for chloride with 1% Silver nitride, which shall not exceed 0.5 PPM.

11. DIMENSIONAL CHECK:

For all QCNRV & CRHNRV Body Castings: Thickness of the body shall be checked throughout the surface on a grid of 100mm x 100mm and recorded & submitted to BHEL.

12. MARKING AND PACKING:

Representation of Marking and identification shall be as per drawing. Also following details to be marked on each casting, on a raised pad using low stress stamps and Castings shall be suitably packed to avoid damage during transit.
1. Foundry code, 2. **Material** specification, grade & **Heat/**melt number, 3. Size and **4.** Class rating.

13. INSPECTION AND CERTIFICATION:

13.1 **For IBR items**:

Products shall be inspected at works and the applicable IBR Form must be countersigned by the Inspecting Authority as indicated below in case the shop**/mill/foundry** is not recognised as a "Well known Foundry" under IBR:

- ❒ **Imported Items:** Inspecting Authority approved by IBR for the Country of origin.
- ❒ **Indigenously Supplied items:** Director of Boilers/Chief Inspector of Boilers/Inspecting Authority approved by IBR, for the respective state.

Certification in IBR Form III-F for IBR items from "IBR-Well Known Foundry" or "Inspecting Authority", as applicable, to be submitted. IBR Form III-F & **separate** Test certificate in English language with following details, shall accompany the product:

1. Purchase Order No. (BHEL), TDC No & its revision no, Test certificate no & date.
2. **Material** Specification, Grade **& Class** with applicable year of code, Heat Number, Quantity & Size
3. Steel making process, Chemistry including incidental elements - Heat wise, Product analysis, Carbon Equivalent (CE).
4. Heat treatment details of the material and test bars.
5. Mechanical test results-Tensile (UTS, YTS **(0.2% offset)**, % elongation, % reduction in area), Impact & Hardness and NDE test results with reference & acceptance standard.
6. Repair details including HT, if any, Cleaning & Surface treatment details.
7. Any other information like clearance of sample casting.
8. Dimensional Inspection Report, where applicable.
9. **For SS:** Measured Radioactivity levels at 5cm from the surface of the castings shall be reported in the Test Certificate stating the measured value at the specified distance (not to be recorded in IBR Form).
10. **Creep test report as per the format suggested in Cl 5 of this TDC (applicable only for IBR application).**

13.2 For PED 2014/68/EU (CE-marking), test certificates of type 3.1 or 3.2, with details specified in Cl 13.1 for separate test certificate, shall be submitted as per BS EN 10204.

- ❒ Type 3.1 – Suppliers shall have ISO 9001-2008/2015 certification certified by Notified Body recognized by European community and test certificate certified by suppliers authorized inspection representative.
- ❒ Type 3.2 – Components inspected and test certificates certified by both the supplier's authorized inspection representative and Notified Body recognized by European community.

14. AUDIT CHECKS AT BHEL:

BHEL reserves the right to carry out audit checks for chemistry, HT condition, mechanical test and NDT on representative test bars or job. Items found defective during check or subsequent processing at BHEL will be rejected.

15. END USE:

For use in valves and other components like flanges, fittings etc. for high temperature & high pressure applications meeting IBR, ASME Section I, ASME B 16.34 and PED 2014/68/EU (CE-marking).

Sketch of zones for RT

SV and SRV Base castings

Base **Bonnet**

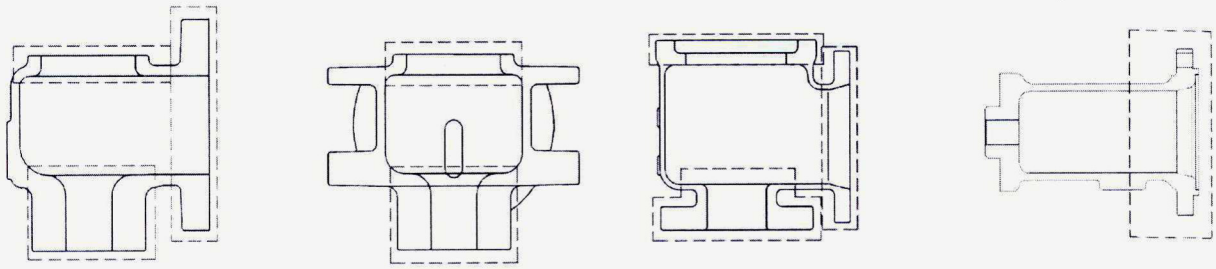

Reheater Isolating Device Body

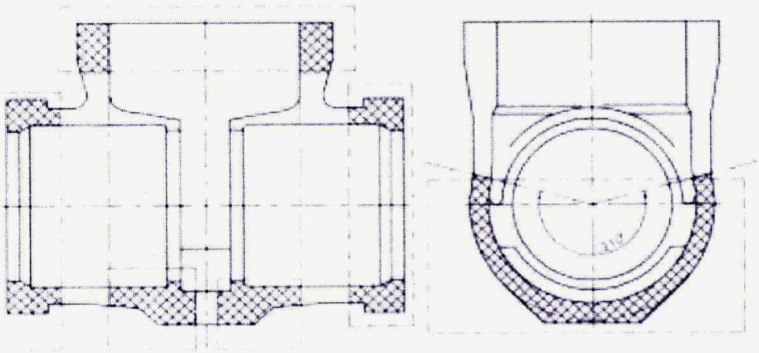

Radiography Area

Soot Blower Valve Body

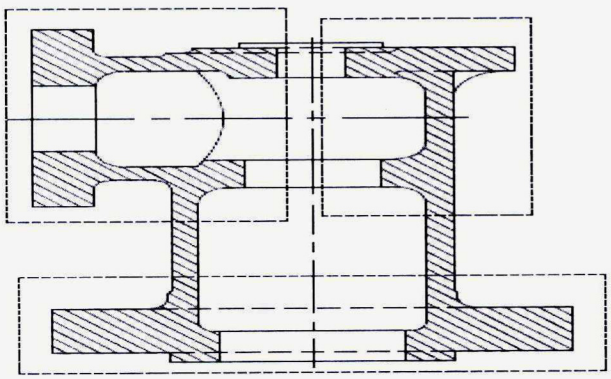

PART CODES : 920243870000, 920131810000, 920243870100, 920131810100

LRD IE, LRD IIE & WB IE – 2.5" 600#

— RADIOGRAPHY AREA

Quick Closing Non Return Valve Body

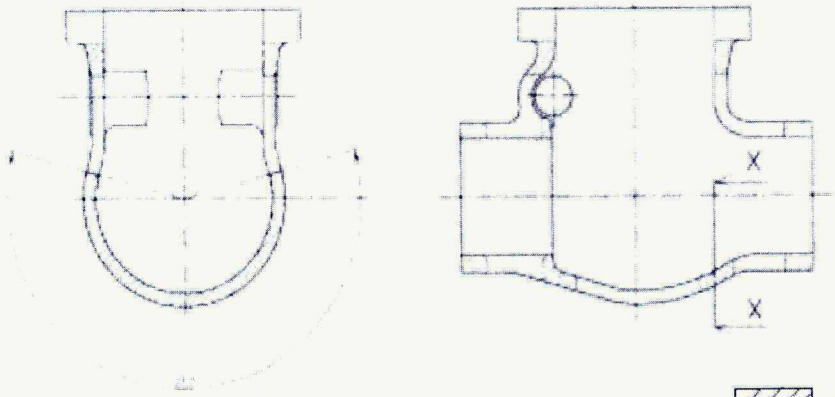

Section-XX

Radiography Area

Cold Reheat Non Return Valve Body

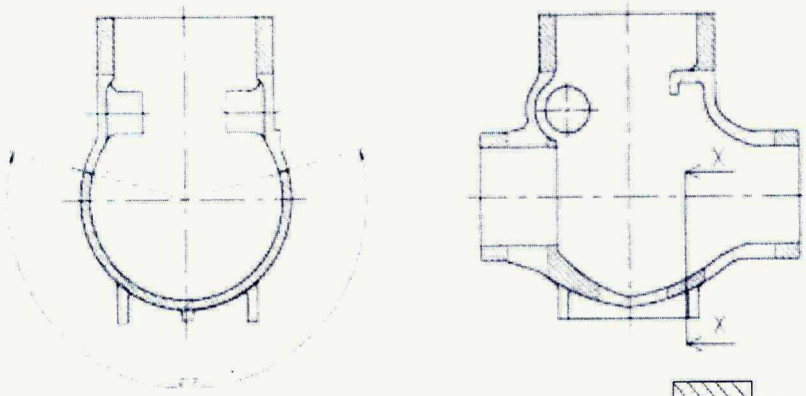

Section-XX

Radiography Area

LP Bypass Stop cum Control Valve Body

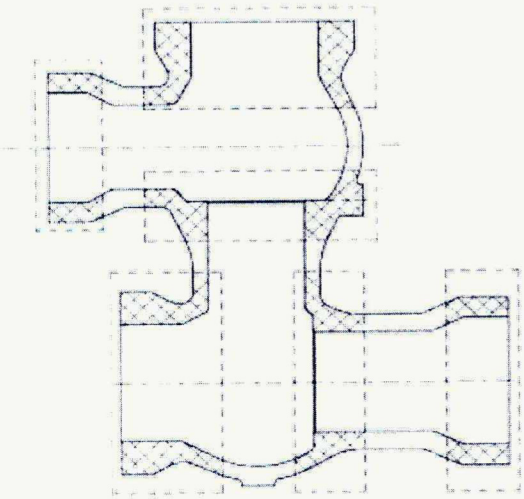

Radiography Area

Revisions record:
Rev 00 – Dt: 13/01/2018 – Fresh issue
Rev 01 - Dt: 19/02/2019 – ***SA/ASTM A 995 Gr 4A (CD3MN) added in Cl 1 & 5 based on Engineering/Valves input***

1. MATERIAL SPECIFICATIONS:

Specification	:	ASME 2015
Carbon Steel (CS)	:	SA / ASTM A216 WCB, WCC & 352 LCB, LCC
Alloy Steel (AS)	:	SA / ASTM A217 WC6, WC9, C12A.
Stainless Steel (SS)	:	SA / ASTM A351 CF3M, CF8, CF8C, CF8M, SA995 6A ***SA / ASTM 995 Gr. 4A(CD3MN)***
Additional Requirement	:	As listed below (Supplementary to above material specifications)
Size, Quantity, Grade/Class	:	As per Purchase Order & Drawing / Pattern.

2. CHEMICAL COMPOSITION AND PROCESS:

a) Melting: As per the Specification, Fully Killed.
Carbon= 0.25% maximum: for SA / ASTM A216 WCB only.
Carbon= 0.15% maximum: for SA / ASTM A217 WC6 & WC9 (For the castings used in QCNRV, CRHNRV, TOA Valves & Conventional valves having contours for welding).

Product Analysis on test bar for each melt including residual elements shall be carried out.

b) All raw materials used in steel making including incoming scrap shall be checked by supplier to ensure freedom from radioactivity. (Applicable for SS material only)

c) Tolerance for chemistry shall be as per the above applicable material specifications/standards specified in Cl 1.

3. DIMENSIONS AND TOLERANCES:

Dimensions & their tolerances shall be as per applicable drawings. For untoleranced dimensions: VL: STDC: 023(Latest).

4. HEAT TREATMENT (HT):

CS – Castings of High Pressure Valve. (Cl.1500 & above), QCNRV & CRHNRV: Shall be in Annealed Condition.
AS – Castings: Normalized and Tempered.
Normalizing Temperature: SA/ASTM A217 WC6, WC9: 920-950°C and for C12A: 1050-1080°C.
Tempering Temperature: SA/ASTM A217 WC6: 680°C min.; WC9: 720°C min.; C12A: 750-780°C.
Others: Heat treatment as per the applicable material specification & grade.

5. MECHANICAL TESTS:

Test bars to be cast integral with the casting or separately. If cast separately, they shall be cast at the same time as the castings and from the same ladle. A metal strip with heat number stamped shall be fused with the test bar during casting, to maintain traceability.

If one (1) casting is made from more than one heat, separate test bars for each cast to be poured and all test bars shall satisfy the requirements. Tests mentioned in Table 1 shall be conducted per heat / Heat treatment batch, as per ASTM A370.

Perform tensile tests at room temperature in accordance with the procedures specified in ASTM A370. Perform a minimum of one tensile test. All yield strengths shall be determined using 0.2 % offset method of ASTM A370. The results of the tensile test(s) shall satisfy the applicable material specification requirements. Hardness testing shall be as per ASTM E10 or E18.

If the results of the tensile test(s) do not satisfy the applicable requirements, two additional tests on two additional test specimens (removed from the same TC with no additional heat treatment) may be performed in an effort to qualify the material. The results of each of these tests shall satisfy the applicable requirements.

Table 1.

Sl. No	TEST	MATERIAL SPECIFICATION			
		SA/ASTM A216, 217	**SA/ASTM A352**	**SA/ASTM A351**	***SA/ASTM A995***
1	Tension Test	As per Material Specification			
2	Hardness Test	As per the Specification	225 HBW max.	Not applicable	*Not applicable*

3	Bend Test Specimen 1" x ¾ "	<table><tr><th></th><th>Angle of Bend</th><th>Dia of Pin</th></tr><tr><td>WCB</td><td>90^0</td><td>2t</td></tr><tr><td>WCC</td><td>90^0</td><td>2t</td></tr><tr><td>WC6</td><td>120^0</td><td>3t</td></tr><tr><td>WC9</td><td>90^0</td><td>3t</td></tr><tr><td>C12A</td><td>90^0</td><td>2t</td></tr></table>	Not applicable	S3 of SA703	*Not applicable*
4	Charpy- U Impact for all QCNRV, CRHNRV bodies.	At Room temperature. Acceptance: Avg /Single=36J/32J min.	Not applicable	Not applicable	*Not applicable*
5	Charpy- V Impact for LPBP bodies	At 20 °C temperature. Acceptance: Avg/Single=27J/21J min.	Not applicable	Not applicable	*Not applicable*

Creep testing and reporting shall be carried out as per CIP:938 (latest revision) for high chrome castings.

6. FETTLING, DRESSING & CLEANING:

- Dressing of castings-Free from risers, in gates, notches, undercuts, deep marks etc.
- Fused wires, parting line fins, chills etc. shall be removed by grinding.
- Gas cutting if employed shall be done before Heat treatment.
- Preheat the material to 200^0C. before gas cutting the Alloy steels.
- Castings shall be blast cleaned both inside and outside for the removal of fused sand, scales etc.
- Visual inspection: 100% as per MSS-SP: 55 (Latest). Acceptance: Type 1: none accepted; Type 2-12: A & B only accepted.

7. NON DESTRUCTIVE TESTING (NDT) AFTER HEAT TREATMENT

The NDE requirements for the castings shall meet the following as shown in Table-2 below. Castings shall be free from surface and internal defects like porosity, shrinkage, sand inclusion, crack, cold shut and other harmful defects. All castings shall be of Radiographic Quality.

1. Radiographic Testing Procedure (RT) : As per ASME B 16.34
2. Magnetic Particle Inspection (MPI) : As per ASTM E709
3. Liquid Penetrant Inspection (LPI) : As per ASTM E165

Table: 2

Product	Components	Characteristics	Type of NDE Check				
			RT	RT Area	RT Acc. Std	MT $	MT Area
Conventional Valves (Gate, Globe & Check)	Body, Bonnet Pr.part yoke, Cover	< 600 Class	10%#	ASME B 16.34 / On critical area as indicated in the Drawing.	As per Table: 3	--	--
	Body, Bonnet, Cover	600 Class & above	100%			--	
	Body, Bonnet, Cover	1500 Class & above	100%			100%	All accessible surfaces including belly.
	Wedge	All Special Class Valves	--	--	--	100%	
Safety Valve	Base	Flanged ends of All Castings	100%	Critical Zones as given in the Drawing/ area shown in the sketch below. The areas where RT cannot be carried out MPI shall be done.	Class 2 of ASTM E446 / E186. For Butt weld ends as per Table- 3	100%	All accessible surfaces
		Weld ends of All Castings	100%			--	--
Safety Relief Valve	Base	All	100%			--	--
	Bonnet		10%#				
	SRV Nozzle	All	100%	All area	Class-2 of ASTM E446 / E186.	--	--
QC NRV, CRH NRV	Body	150 & 300 Class	100%	Butt Weld Ends	As per Table: 3	100%	All accessible surfaces

		600 Class & above	100%	Critical Zones as given in the Drawing/ area shown in the sketch below. The areas where RT cannot be carried out MPI shall be done.	As per Table: 3	100%	including belly.
	Body (Special)	All					
Soot Blower Valve	Body	All	10%#	Critical Zones as given in the Drawing/ area shown in the sketch below. The areas where RT cannot be carried out MPI shall be done.	As per Table: 3	--	--
Isolating Valve/ device	Body	< 600 Class	100%	Critical Zones as given in the Drawing/ area shown in the sketch below. The areas where RT cannot be carried out MPI shall be done.	As per Table: 3	--	All accessible surfaces including belly.
		600 Class & above				--	
		1500 Class & above				100%	
LP Bypass Valve	Body	All	100%	Critical Zones as given in the Drawing/ area shown in the sketch below. The areas where RT cannot be carried out MPI shall be done.	As per Table: 3	--	--

$ LPI can be substituted for MPI in all inaccessible area and for stainless steel castings # Refer Cl 7.1

Table: 3

Type Of Discontinuity	Acceptance Level Category	< 600 CLASS		≥ 600 CLASS	
		Thickness ≤2"	Thickness >2"	Thickness ≤2"	Thickness >2"
Gas Porosity	A	A2	A3	A1	A2
Sand/Slag inclusion	B	B3	B3	B2	B2
Shrink Type-1	C	CA2	CA3	CA1	CA2
Shrink Type-2	C	CB3	CB3	CB2	CB2
Shrink Type-3	C	CC3	CC3	CC2	CC2
Crack	D	NONE	NONE	NONE	NONE
Hot Tear	E	NONE	NONE	NONE	NONE
Un-fused Inserts (Chills/Chaplets)	F	NONE	NONE	NONE	NONE

a. Butt welding ends shall be free of shrinkage, crack & hot tear.
b. For butt weld ends Gas hole/Porosity and sand inclusions to be within level A1 &B1 respectively

NDE for SS material: Castings shall be checked for radioactive contamination and reported. Survey meter shall be used to measure near the surface. Acceptance limits: Shall be less than 0.1 milli Rontgen (MR) per hour or 1 micro Sievert per hour.

7.1 # 10% Sampling shall be done as follows: (Wherever specified): The vendor shall select 10% of the Casting from the lot consisting of same size and type, (along with melt number / Sl.nos of the castings covered in the lot) for Radiography. A lot to be specified as the total number of castings as above, supplied in 4 months period (Jan-Apr, May-Aug, Sep-Dec). The vendor shall radiograph these specified castings and incorporate the lot size and melt no. and Sl.no in the RT reports along with the other Sl. No.s of the other castings covered in the lot. If the identified casting is defective then two more castings shall be radiographed.If these two castings are defect free then the lot is acceptable. If any one of these castings is defective then all the remaining castings shall be radiographed and all defective areas shall be repaired. BHEL will carry out audit on the lots at the vendor works at any time.

7.2 Surface NDE (MPI & LPI): Testing as per ASME B16.34.

1. **Relevant indication:** Surface-rupture NDE indication with major dimensions > 1.6 mm (1/16 in).
2. **Linear indication:** Surface NDE indication whose length is ≥ three times its width.

3. **Rounded indication:** Surface NDE indication whose length is < three times its width.

Acceptance for MPI & LPI:

4. Cracks are not permitted.
5. For linear indications other than cracks, indications must be separated by a distance greater than the length of an acceptable indication. Maximum allowable length of the indication shall be:
   a) For thickness(t) up to 13mm= 8mm,
   b) For thickness from 13 to 25mm = 13mm
   c) For thickness above 25mm=18mm.
6. For rounded indications, 4 or more indications in a line separated by 1.5 mm or less edge to edge are unacceptable. Maximum allowable diameter of the indication shall be:
   a) For thickness up to 13mm =8mm
   b) For thickness above 13mm =13mm

8. DEVELOPMENT STAGE OF CASTING:

a) During developmental stage of new castings or change to an existing casting on account of change in dimension which warrants pattern correction, Foundry to ensure the first sample casting meets dimensional, NDE & Quality requirements in this TDC, before starting bulk production. Sample castings: Three castings with nominal bore (NB) ≤ 100 mm & One casting with NB > 100 mm for each type shall be inspected by BHEL personnel for dimension and RT requirements at Casting Vendor /BHEL works. One Test bar for each melt/heat treatment batch shall be supplied along with casting for test at BHEL. RT shall be carried out on entire area of the casting to the acceptance requirement of Table-2 & 3. In addition 100% MPI on all critical areas like change of sections, riser & in gate portions shall be carried out. Casting to be inspected for dimensions after proof machining wherever necessary. If machining operation is involved, the same shall be done and defect free condition shall be ensured. If any defect noticed in RT and machining, the type of defect shall be analyzed and accordingly size of gate, runner, riser and pouring methodology to be modified to get defect free casting. Sampling shall be continued till achieving sound casting. After satisfactory development of sampling, bulk production shall be started. However, weld repaired areas identified in visual examination for doubtful indications to be probed by MPI. Accepted sample castings may be considered for fixing the nominal weight of the castings.

b) During developmental stage, RT on sample castings of Yoke, Yoke Clamp & Wedge/Disc shall meet Level-3 of ASTM E446/E186/E280.

c) Radiography not required after satisfactory development of casting & production based on established method for following parts: SRV Bonnet, Disc Holder,Upper and Lower adjusting rings, Packed cap, Cover Plate, Yoke and SRV guide flanges.

9. REPAIR:

Castings with unacceptable cracks, hot tears, shrinkage, etc. to be rectified by grinding & if required by welding. Welding to be done by qualified welder and qualified procedure as per ASME Section IX.

Guidelines for repair of steel castings shall be as per SIP:VS:17(Latest) for activities like defects require/ not require weld repair, welding, Post Weld Heat Treatment, NDE and surface treatment. All repaired areas after PWHT shall be NDE tested and Hardness tested. Hardness shall meet the material specification requirements.

10. SURFACE TREATMENT:

SS castings to be pickled & passivated (after repair & HT if any) as per ASTM A380. Satisfactory passivity of the surface to be checked using SS passivity test kit (Free iron test). After passivation, rinsing & test, the rinsed demineralised water to be checked for chloride with 1% Silver nitride, which shall not exceed 0.5 PPM.

11. DIMENSIONAL CHECK:

For all QCNRV & CRHNRV Body Castings: Thickness of the body shall be checked throughout the surface on a grid of 100mm x 100mm and recorded & submitted to BHEL.

12. MARKING AND PACKING:

Representation of Marking and identification shall be as per drawing. Also following details to be marked on each casting, on a raised pad using low stress stamps and Castings shall be suitably packed to avoid damage during transit.

1. Foundry code, 2. Material specification, grade 3.Heat/melt number 4. Size and 5. Class rating.

13. INSPECTION AND CERTIFICATION:

13.1 Supplier shall have valid ISO:9001-2015 certificate for the duration of the contract. However, ISO:9001-2008 certification is acceptable till 14th September 2018.

13.2 Finished Castings shall be inspected at supplier works and certified as per BS EN 10204 Type 3.2 by any ASME Authorized Inspection Agency or their subsidiaries covering all details listed in Cl. 13.3.

13.3 Manufacturer's Test certificate (MTC) in English language, not limited to the following, shall accompany all products:

1. Purchase Order No. (BHEL), TDC No & its revision no, Test certificate no & date.
2. Material Specification, Grade & Class with applicable year of code, Heat Number, Quantity & Size
3. Steel making process, Chemistry including incidental elements - Heat wise, Product analysis, Carbon Equivalent (CE).
4. Heat treatment details of the material and test bars.
5. Mechanical test results-Tensile (UTS, YTS (0.2% offset), % elongation, % reduction in area), Impact & Hardness and NDE test results with reference & acceptance standard.
6. Repair details including HT, if any, Cleaning & Surface treatment details.
7. Any other information like clearance of sample casting.
8. Dimensional Inspection Report, where applicable.
9. For SS: Measured Radioactivity levels at 5cm from the surface of the castings shall be reported in the Test Certificate stating the measured value at the specified distance.
10. Creep test report as per CIP:938 (latest revision) for high chrome castings.
11. Valid ISO 9001 Certificate

14. AUDIT CHECKS AT BHEL:

BHEL reserves the right to carry out audit checks for chemistry, HT condition, mechanical test and NDT on representative test bars or job. Items found defective during check or subsequent processing at BHEL will be rejected.

15. END USE:

For use in valves and other components like flanges, fittings etc. for high temperature & high pressure applications meeting ASME Section I and ASME B 16.34 for Maitree Project (2x660 MW).

Sketch of zones for RT

SV and SRV Base castings

Base **Bonnet**

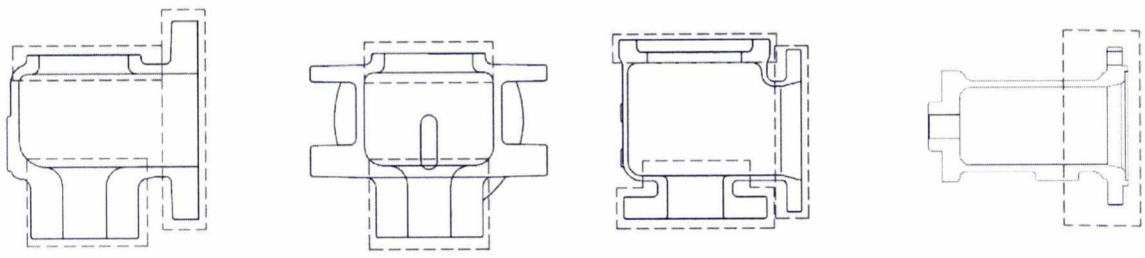

Reheater Isolating Device Body

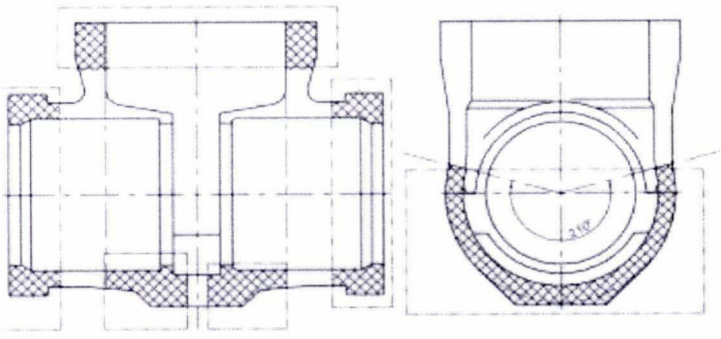

Radiography Area

Soot Blower Valve Body

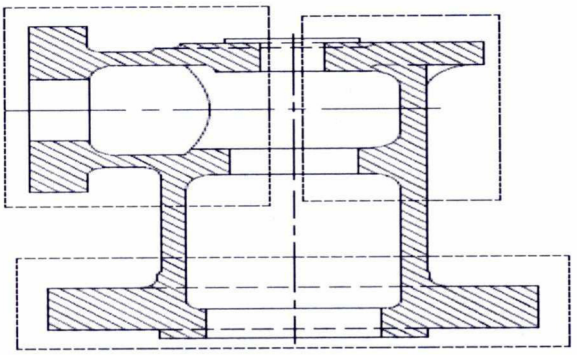

PART CODES : 920243870000, 920131810000, 920243870100, 920131810100
LRD IE, LRD IIE & WB IE – 2.5" 600#

— RADIOGRAPHY AREA

Quick Closing Non Return Valve Body

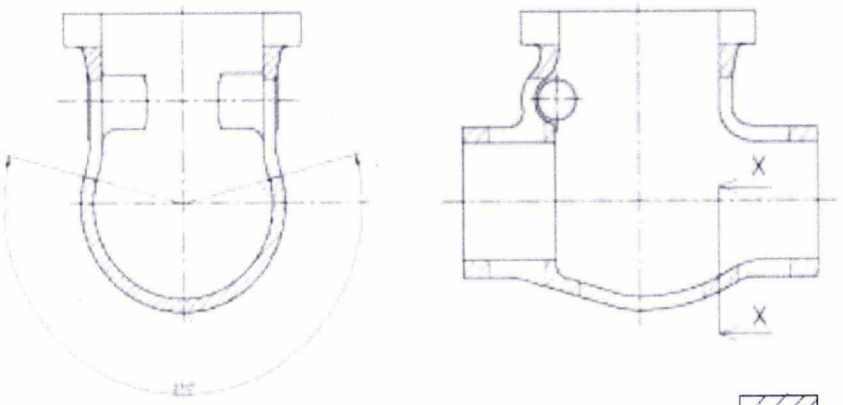

Section-XX

Radiography Area

Cold Reheat Non Return Valve Body

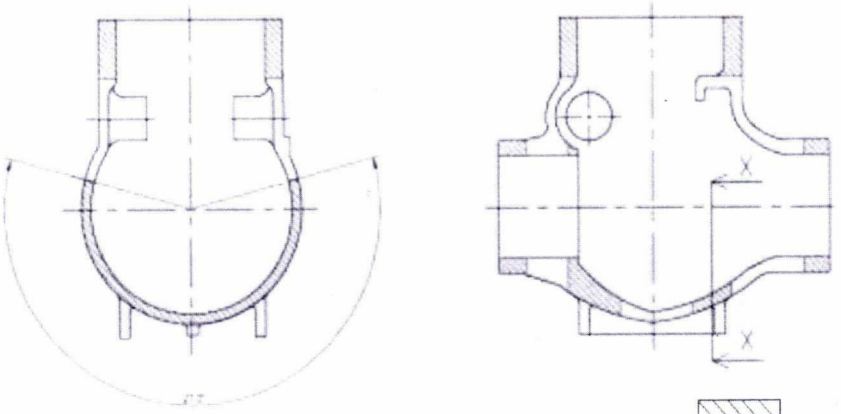

Section-XX

Radiography Area

LP Bypass Stop cum Control Valve Body

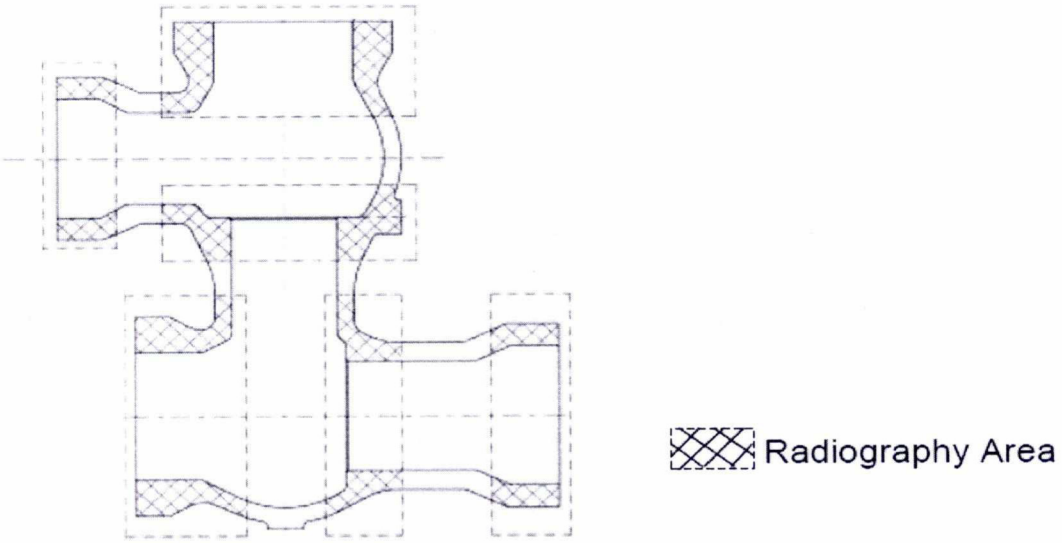

19/02/19	19/02/19	19/2/19	19/02/19	19-2-19	19/02/19	19/02/19
Abdur Rahman	G. Panneer Selvam	S. Anand Kumar	K. Rajasekaran	R. Rajappan	R. Ananthakrishnan	Amit Roy
Sr. Engr/ QA	DGM/QA	SDGM/PE/FB	DGM/Valves/Engg	SDGM/MM	AGM/Valves/Purchase	AGM/QA& BE
Prepared By	**Reviewed By**					**Approved By**

Revisions record:
Rev. 00: Dt-16/05/2018 - Fresh Issue
Rev. 01: Dt-21/07/2018- TDC Title revised to include refinery projects as per EIL Specification

1. MATERIAL SPECIFICATIONS:

All the codes, standards, specifications, drawings & procedures, etc., referred in this TDC shall be of latest revision as on the date of Enquiry/Purchase Order, whichever is earlier, unless specified otherwise.

Carbon Steel (CS)		: SA / A216 WCB,WCC
Alloy Steel (AS)		: SA / ASTM A217 WC6, WC9
Stainless Steel (SS)		: SA / ASTM A351 CF8, CF8M
Additional Requirement	:	As listed below (Supplementary to above material specifications)
Size, Quantity, Grade/Class	:	As per Purchase Order & Drawing / Pattern.

2. CHEMICAL COMPOSITION AND PROCESS:

a) Melting: As per the Specification, Fully Killed.
Carbon= 0.25% maximum: for SA / ASTM A216 WCB only.
Carbon= 0.15% maximum: for SA / ASTM A217 WC6 & WC9; S, P Mn- as per IBR
Product Analysis on test bar for each melt including residual elements shall be carried out.

b) All raw materials used in steel making including incoming scrap shall be checked by supplier to ensure freedom from radioactivity. (Applicable for SS material only)

c) Tolerance for chemistry shall be as per the above applicable material specifications/standards specified in Cl 1.

3. DIMENSIONS AND TOLERANCES:

Dimensions & their tolerances shall be as per applicable drawings. For untoleranced dimensions: VL: STDC: 023.

4. HEAT TREATMENT (HT):

CS – Shall be in Normalized Condition
AS – Castings: Normalized and Tempered.
Normalizing Temperature: SA/ASTM A217 WC6, WC9: 920-950°C
Tempering Temperature: SA/ASTM A217 WC6: 680°C min.; WC9: 720°C min.
SS - All Stainless Steel Castings shall be solution heat treated.
All other materials: Heat treatment shall be as per the applicable material specification & grade

5. MECHANICAL TESTS:

a) Test bars to be cast integral with the casting or separately. If cast separately, they shall be cast at the same time as the castings and from the same ladle. A metal strip with heat number stamped shall be fused with the test bar during casting, to maintain traceability.

If one (1) casting is made from more than one heat, separate test bars for each cast to be poured and all test bars shall satisfy the requirements. Tests mentioned in Table 1 shall be conducted per heat / Heat treatment batch, as per ASTM A370.

Perform tensile tests at room temperature in accordance with the procedures specified in ASTM A370. Perform a minimum of one tensile test. All yield strengths shall be determined using 0.2 % offset method of ASTM A370. The results of the tensile test(s) shall satisfy the applicable material specification requirements. Hardness testing shall be as per ASTM E10 or E18.

If the results of the tensile test(s) do not satisfy the applicable requirements, two additional tests on two additional test specimens (removed from the same TC with no additional heat treatment) may be performed in an effort to qualify the material. The results of each of these tests shall satisfy the applicable requirements.

Table 1.

<table>
<tr><th rowspan="2">No</th><th rowspan="2">TEST</th><th colspan="2">MATERIAL SPECIFICATIONS</th></tr>
<tr><th>SA/ASTM A216, 217</th><th>SA/ASTM A351</th></tr>
<tr><td>1</td><td>Tension Test</td><td colspan="2">As per the Material Specification</td></tr>
<tr><td>2</td><td>Hardness Test</td><td colspan="2">As per the Material Specification</td></tr>
<tr><td>3</td><td>Bend Test Specimen
1" x ¾ "</td><td><table><tr><th></th><th>Bend Angle</th><th>Dia of Pin</th></tr><tr><td>WCB</td><td>90^0</td><td>2t</td></tr><tr><td>WC6</td><td>120^0</td><td>3t</td></tr><tr><td>WC9</td><td>90^0</td><td>3t</td></tr></table></td><td>S3 of SA703</td></tr>
</table>

b) Inter Granular Corrosion (IGC) tet shall be conducted for all austenitic stainless steels as follows:
ASTM A262 Practice 'B' with acceptance criteria of '60 mils/year(max)'.
For the IGC test as described above, two sets of samples to be drawn from each solution annealing lot. One set shall correspond to the highest Carbon content and the other to the highest pressure rating.

6. FETTLING, DRESSING & CLEANING:

- Dressing of castings-Free from risers, in gates, notches, undercuts, deep marks etc.
- Fused wires, parting line fins, chills etc. shall be removed by grinding.
- Gas cutting if employed shall be done before Heat treatment.
- Preheat the material to 200^{0}C before gas cutting the Alloy steels.
- Castings shall be blast cleaned both inside and outside for the removal of fused sand, scales etc.
- Visual inspection: 100% as per MSS-SP:55. Acceptance: Type 1: none accepted; Type 2-12: A & B only accepted.

7. NON DESTRUCTIVE TESTING (NDT) AFTER HEAT TREATMENT

The NDE requirements for the castings shall meet the following as shown in Table-2 below. Castings shall be free from surface and internal defects like porosity, shrinkage, sand inclusion, crack, cold shut and other harmful defects. All castings shall be of Radiographic Quality.

1. Radiographic Testing Procedure (RT) : As per ASME B 16.34
2. Magnetic Particle Inspection (MPI) : As per ASTM E709
3. Liquid Penetrant Inspection (LPI) : As per ASTM E165

Radiography shall be done by X Ray /Gamma Ray to get the required sensitivity.

Valve castings shall undergo Radiographic Examination as specified below:

Table: 2

Product	Components	Characteristics	Type of NDE Check		
			RT	RT Area	RT Acc. Std
Conventional Valves and Other valves	ALL	150 Class ≤24" ≥26"	# 100%	ASME B 16.34	ASME B 16.34
	ALL	300 Class ≤16" ≥18"	# 100%		
	ALL	≥600 Class All sizes	100%		

#Radiographic testing requirements shall be as per Engineering Drawing or Valve material specification (VMS) issued by Customer/Consultant.

NDE for SS material: Castings shall be checked for radioactive contamination and reported. Survey meter shall be used to measure near the surface. Acceptance limits: Shall be less than 0.1 milli Rontgen (MR) per hour or 1 micro Sievert per hour.

7.2 Surface NDE (MPI & LPI): Testing as per ASME B16.34.

1. **Relevant indication: Surface-rupture NDE indication with major dimensions > 1.6 mm (1/16 in).**
2. **Linear indication: Surface NDE indication whose length is ≥ three times its width.**
3. **Rounded indication: Surface NDE indication whose length is < three times its width.**
   Acceptance for MPI & LPI:
4. Cracks are not permitted.
5. For linear indications other than cracks, indications must be separated by a distance greater than the length of an acceptable indication. Maximum allowable length of the indication shall be:
   a) For thickness(t) up to 13mm= 8mm,
   b) For thickness from 13 to 25mm = 13mm
   c) For thickness above 25mm=18mm.
6. For rounded indications, 4 or more indications in a line separated by 1.5 mm or less edge to edge are unacceptable. Maximum allowable diameter of the indication shall be:
   a) For thickness up to 13mm =8mm
   b) For thickness above 13mm =13mm

8. DEVELOPMENT STAGE OF CASTING:

a) During developmental stage, of new castings or change to an existing casting on account of change in dimension which warrants pattern correction, Foundry to ensure, first sample pieces meet dimensional, NDE & Quality requiremnets in this TDC, before starting bulk production. Sample castings, 3 castings with nominal bore (NB) ≤ 100mm. & 1 casting with NB > 100 mm for each type shall be inspected for dimension and RT requirements at BHEL/Vendor works by BHEL personnel. One Test bar for each melt/heat treatment batch shall be supplied along with casting for test at BHEL. RT shall be carried out on entire area of the casting to the acceptance requirement of Table-2. In addition 100% MPI on all critical areas like change of sections, riser & in gate portions shall be carried out. Casting to be inspected for dimensions after proof machining wherever necessary. If machining operation is invloved the same shall be done and defect free condition shall be ensured. If any defect noticed in RT and machining, the type of defect shall be analyzed and accordingly size of gate, runner, riser and pouring methodolgy to be modified to get defect free casting. Sampling shall be continued till achieving sound casting. After satisfactory development of sampling bulk production shall be started. However weld repaired areas identified in visual examination for doubtful indications to be probed by MPI. Accepted sample castings may be considered for fixing the nominal weight of the castings.

b) During developmental stage RT on sample castings of Yoke, Yoke Clamp & Wedge/Disc shall meet Level-3 of ASTM E446/E186/E280.

9. REPAIR:

Castings with unacceptable cracks, hot tears, shrinkage, etc. to be rectified by grinding & if required by welding. Welding to be done by qualified welder and qualified procedure as per ASME Section IX. For IBR items welders shall be qualified as per IBR.

Guidelines for repair of steel castings shall be as per SIP:VS:17 for activities like defects require/ not require weld repair, welding, Post Weld Heat Treatment, NDE and surface treatment. All repaired areas after PWHT shall be NDE tested and Hardness tested. Hardness shall meet material specification.

10. SURFACE TREATMENT:

SS castings to be pickled & passivated (after repair & HT if any) as per ASTM A380. Satisfactory passivity of the surface to be checked using SS passivity test kit (Free iron test). After passivation, rinsing & test, the rinsed demineralised water to be checked for chloride with 1% Silver nitride, which shall not exceed 0.5 PPM.

11. MARKING AND PACKING:

1. Vendor's name (Foundry Code) 2. Nominal size 3. Valve body rating 4. Material designation 5. Direction of flow (if any) etc. shall be integral on the body. Castings shall be suitably packed to avoid damage during transit.

Additionally, Heat/melt number to be marked on each casting, on a raised pad using low stress stamps.

12. INSPECTION AND CERTIFICATION:

12.1 **For IBR items**:

Products shall be inspected at works and the applicable IBR Form must be countersigned by the Inspecting Authority as indicated below in case the shop/**mill/foundry** is not recognised as a "Well known Foundry" under IBR:

- ❒ **Imported Items:** Inspecting Authority approved by IBR for the Country of origin.
- ❒ **Indigenously Supplied items:** Director of Boilers/Chief Inspector of Boilers/Inspecting Authority approved by IBR, for the respective state.

Certification in IBR Form III-F for IBR items from "IBR-Well Known Foundry" or "Inspecting Authority", as applicable, to be submitted. IBR Form III-F & **separate** Test certificate in English language with following details, shall accompany the product:

1. Purchase Order No. (BHEL), TDC No & its revision no, Test certificate no & date.
2. **Material** Specification, Grade **& Class** with applicable year of code, Heat Number, Quantity & Size
3. Steel making process, Chemistry including incidental elements - Heat wise, Product analysis, Carbon Equivalent (CE).
4. Heat treatment details of the material and test bars.
5. Mechanical test results-Tensile (UTS, YTS **(0.2% offset)**, % elongation, % reduction in area), Impact & Hardness and NDE test results with reference & acceptance standard.
6. Results of IGC test as per Clause 5 (b).
7. Repair details including HT, if any, Cleaning & Surface treatment details.
8. Any other information like clearance of sample casting.
9. Dimensional Inspection Report, where applicable.
10. **For SS:** Measured Radioactivity levels at 5cm from the surface of the castings shall be reported in the Test Certificate stating the measured value at the specified distance (not to be recorded in IBR Form).

13. AUDIT CHECKS AT BHEL:

BHEL reserves the right to carry out audit checks for chemistry, HT condition, mechanical test and NDT on representative test bars or job. Items found defective during check or subsequent processing at BHEL will be rejected.

14. END USE:

These castings are intended for use in *refinery projects as per EIL specification 6-44-0052 Rev. 7.*

21/07/2018	21/07/18	21/07/18	21/07/18	21/07/18
Abdur Rahman Sultan	G. Panneer Selvam	K. Rajasekaran	R. Ananthakrishnan	Amit Roy
Sr.Engineer /QA	DGM/QA	DGM/Valves/Engg	AGM/Valves/Purchase	AGM/QA&BE
Prepared By	**Reviewed By**			**Approved By**

70-006

Bharat Heavy Electricals Limited

High Pressure Boiler Plant, Tiruchirappalli-620 014. India.

Grams : BHARATELEC
Phone : --
Telex : 0455 - 211, 212, 295 & 296
FAX : 91 - (0431) - 52710

PRODUCT ENGINEERING/VALVES

TDC FOR UNTOLERANCED DIMENSIONS IN CASTING & FORGING DRAWINGS

Scope :

This technical delivery condition specifies the tolerance for the untoleranced dimension for the castings and forgings wherever tolerances are not specified in the applicable drawin applicable material TDC.

A. **Castings :**

Nominal dimension (in mm)				Tolerance on diameter or height (in mm)
UPTO	4			± 0.5
OVER	4	UPTO	16	± 1.0
OVER	16	UPTO	65	± 1.5
OVER	65	UPTO	125	± 2.0
OVER	125	UPTO	250	± 2.5
OVER	250	UPTO	500	± 3.0
OVER	500	UPTO	1000	± 4.0
OVER	1000	UPTO	1600	± 5.0

B. **Forgings :** As per Table (1), (2), & (3) & (4)

PREPARED

CHECKED

APPROVED
(S. KUMAR
SM/PE/VSB)
28/2/94

TABLE 1. LENGTH, WIDTH, HEIGHT, MISMATCH, RESIDUAL FLASH AND TRIMMED FLAT OF DROP, PRESS AND UPSET FORGINGS (NORMAL TOLERANCES)

DROP, PRESS & UPSET FORGINGS – TOLERANCES FOR: LENGTH, WIDTH & HEIGHT*

MISMATCH ; RESIDUAL FLASH & TRIMMED FLAT (* DIA & LENGTH FOR UPSET FORGINGS)

NOTE: CENTRE TO SURFACE; STEP IN ONE DIE; $+\frac{1}{3}, -\frac{1}{3}$ OF TOTAL TOLERANCE

INTERNAL DIMENSION: REVERSE + AND – SIGNS.

MISMATCH	RESIDUAL FLASH (+) TRIMMED FLAT (–)	TRIM LINE: ASYMMETRIC	TRIM LINE: STRAIGHT OR SYMMETRIC	WEIGHT (kg) ABOVE-TO (INCL)	DIFFICULTY OF MATERIAL M1	DIFFICULTY OF MATERIAL M2	COMPLEXITY S1 (>0.63 ≤ 1)	COMPLEXITY S2 (>0.32 ≤ 0.63)	COMPLEXITY S3 (>0.16 ≤ 0.32)	COMPLEXITY S4 (≤ 0.16)
0.4	0.5			0-0.4						
0.5	0.6			0.4-1.0						
0.6	0.7			1.0-1.8						
0.7	0.8			1.8-3.2						
0.8	1			3.2-5.6						
1	1.2			5.6-10						
1.2	1.4			10-20						
1.4	1.7			20-50						
1.7	2			50-120						
2	2.4			120-250						
2.4	2.8									

QUALITY (NORMAL)

MM

ABOVE TO (INCL)	0 – 32	32 – 100	100 – 160	160 – 250	250 – 400	400 – 630	630 – 1000	1000 – 1600	1600 – 2500
	$1.1^{+0.7}_{-0.4}$	$1.2^{+0.8}_{-0.4}$	$1.4^{+0.9}_{-0.5}$	$1.6^{+1.1}_{-0.5}$	$1.8^{+1.2}_{-0.6}$	$2^{+1.3}_{-0.7}$			
	$1.2^{+0.8}_{-0.4}$	$1.4^{+0.9}_{-0.5}$	$1.6^{+1.1}_{-0.5}$	$1.8^{+1.2}_{-0.6}$	$2^{+1.3}_{-0.7}$	$2.2^{+1.5}_{-0.7}$			
	$1.4^{+0.9}_{-0.5}$	$1.6^{+1.1}_{-0.5}$	$1.8^{+1.2}_{-0.6}$	$2^{+1.3}_{-0.7}$	$2.2^{+1.5}_{-0.7}$	$2.5^{+1.7}_{-0.8}$	$2.8^{+1.9}_{-0.9}$		
	$1.6^{+1.1}_{-0.5}$	$1.8^{+1.2}_{-0.6}$	$2^{+1.3}_{-0.7}$	$2.2^{+1.5}_{-0.7}$	$2.5^{+1.7}_{-0.8}$	$2.8^{+1.9}_{-0.9}$	$3.2^{+2.1}_{-1.1}$	$3.6^{+2.4}_{-1.2}$	
	$1.8^{+1.2}_{-0.6}$	$2^{+1.3}_{-0.7}$	$2.2^{+1.5}_{-0.7}$	$2.5^{+1.7}_{-0.8}$	$2.8^{+1.9}_{-0.9}$	$3.2^{+2.1}_{-1.1}$	$3.6^{+2.4}_{-1.2}$	$4^{+2.7}_{-1.3}$	$4.5^{+3}_{-1.5}$
	$2^{+1.3}_{-0.7}$	$2.2^{+1.5}_{-0.7}$	$2.5^{+1.7}_{-0.8}$	$2.8^{+1.9}_{-0.9}$	$3.2^{+2.1}_{-1.1}$	$3.6^{+2.4}_{-1.2}$	$4^{+2.7}_{-1.3}$	$4.5^{+3}_{-1.5}$	$5^{+3.3}_{-1.7}$
	$2.2^{+1.5}_{-0.7}$	$2.5^{+1.7}_{-0.8}$	$2.8^{+1.9}_{-0.9}$	$3.2^{+2.1}_{-1.1}$	$3.6^{+2.4}_{-1.2}$	$4^{+2.7}_{-1.3}$	$4.5^{+3}_{-1.5}$	$5^{+3.3}_{-1.7}$	$5.6^{+3.7}_{-1.9}$
	$2.5^{+1.7}_{-0.8}$	$2.8^{+1.9}_{-0.9}$	$3.2^{+2.1}_{-1.1}$	$3.6^{+2.4}_{-1.2}$	$4^{+2.7}_{-1.3}$	$4.5^{+3}_{-1.5}$	$5^{+3.3}_{-1.7}$	$5.6^{+3.7}_{-1.9}$	$6.3^{+4.2}_{-2.1}$
	$2.8^{+1.9}_{-0.9}$	$3.2^{+2.1}_{-1.1}$	$3.6^{+2.4}_{-1.2}$	$4^{+2.7}_{-1.3}$	$4.5^{+3}_{-1.5}$	$5^{+3.3}_{-1.7}$	$5.6^{+3.7}_{-1.9}$	$6.3^{+4.2}_{-2.1}$	$7^{+4.7}_{-2.3}$
	$3.2^{+2.1}_{-1.1}$	$3.6^{+2.4}_{-1.2}$	$4^{+2.7}_{-1.3}$	$4.5^{+3}_{-1.5}$	$5^{+3.3}_{-1.7}$	$5.6^{+3.7}_{-1.9}$	$6.3^{+4.2}_{-2.1}$	$7^{+4.7}_{-2.3}$	$8^{+5.3}_{-2.7}$
	$3.6^{+2.4}_{-1.2}$	$4^{+2.7}_{-1.3}$	$4.5^{+3}_{-1.5}$	$5^{+3.3}_{-1.7}$	$5.6^{+3.7}_{-1.9}$	$6.3^{+4.2}_{-2.1}$	$7^{+4.7}_{-2.3}$	$8^{+5.3}_{-2.7}$	9^{+6}_{-3}
	$4^{+2.7}_{-1.3}$	$4.5^{+3}_{-1.5}$	$5^{+3.3}_{-1.7}$	$5.6^{+3.7}_{-1.9}$	$6.3^{+4.2}_{-2.1}$	$7^{+4.7}_{-2.3}$	$8^{+5.3}_{-2.7}$	9^{+6}_{-3}	$10^{+6.7}_{-3.3}$
	$4.5^{+3}_{-1.5}$	$5^{+3.3}_{-1.7}$	$5.6^{+3.7}_{-1.9}$	$6.3^{+4.2}_{-2.1}$	$7^{+4.7}_{-2.3}$	$8^{+5.3}_{-2.7}$	9^{+6}_{-3}	$10^{+6.7}_{-3.3}$	$11^{+7.3}_{-3.7}$
	$5^{+3.3}_{-1.7}$	$5.6^{+3.7}_{-1.9}$	$6.3^{+4.2}_{-2.1}$	$7^{+4.7}_{-2.3}$	$8^{+5.3}_{-2.7}$	9^{+6}_{-3}	$10^{+6.7}_{-3.3}$	$11^{+7.3}_{-3.7}$	12^{+8}_{-4}
	$5.6^{+3.7}_{-1.9}$	$6.3^{+4.2}_{-2.1}$	$7^{+4.7}_{-2.3}$	$8^{+5.3}_{-2.7}$	9^{+6}_{-3}	$10^{+6.7}_{-3.3}$	$11^{+7.3}_{-3.7}$	12^{+8}_{-4}	$14^{+9.3}_{-4.7}$

TABLE 2 THICKNESS FOR DROP, PRESS AND UPSET FORGINGS AND EJECTOR MARKS FOR DROP AND PRESS FORGINGS (NORMAL TOLERANCES)

DROP, PRESS & UPSET FORGINGS – TOLERANCES FOR: THICKNESS; EJECTOR MARKS*

*(DROP AND PRESS FORGINGS ONLY)

EJECTOR MARKS	WEIGHT (kg) ABOVE – TO (INCL)	DIFFICULTY OF MATERIAL M1	M2	COMPLEXITY S1 > 0·63 ≤ 1	S2 > 0·32 ≤ 0·63	S3 > 0·16 ≤ 0·32	S4 ≤ 0·16
1	0-0·4						
1·2	0·4-1·2						
1·6	1·2-2·5						
2	2·5-5						
2·4	5-8						
3·2	8-12						
4	12-20						
5	20-36						
6·4	36-63						
8	63-110						
10	110-200						
12·6	200-250						

QUALITY (NORMAL)

MM ABOVE – TO (INCL)	0–16	16–40	40–63	63–100	100–160	160–250	>250
1	$1^{+0.7}_{-0.3}$	$1.1^{+0.7}_{-0.4}$	$1.2^{+0.8}_{-0.4}$	$1.4^{+0.9}_{-0.5}$	$1.6^{+1.1}_{-0.5}$	$1.8^{+1.3}_{-0.6}$	$2^{+1.3}_{-0.7}$
1·1	$1.1^{+0.7}_{-0.4}$	$1.2^{+0.8}_{-0.4}$	$1.4^{+0.9}_{-0.5}$	$1.6^{+1.1}_{-0.5}$	$1.8^{+1.3}_{-0.6}$	$2^{+1.3}_{-0.7}$	$2.2^{+1.5}_{-0.7}$
1·2	$1.2^{+0.8}_{-0.4}$	$1.4^{+0.9}_{-0.5}$	$1.6^{+1.1}_{-0.5}$	$1.8^{+1.2}_{-0.6}$	$2^{+1.3}_{-0.7}$	$2.2^{+1.5}_{-0.7}$	$2.5^{+1.7}_{-0.8}$
1·4	$1.4^{+0.9}_{-0.5}$	$1.6^{+1.1}_{-0.5}$	$1.8^{+1.2}_{-0.6}$	$2^{+1.3}_{-0.7}$	$2.2^{+1.5}_{-0.7}$	$2.5^{+1.7}_{-0.8}$	$2.8^{+1.9}_{-0.9}$
1·6	$1.6^{+1.1}_{-0.5}$	$1.8^{+1.2}_{-0.6}$	$2^{+1.3}_{-0.7}$	$2.2^{+1.5}_{-0.7}$	$2.5^{+1.7}_{-0.8}$	$2.8^{+1.9}_{-0.9}$	$3.2^{+2.1}_{-1.1}$
1·8	$1.8^{+1.2}_{-0.6}$	$2^{+1.3}_{-0.7}$	$2.2^{+1.5}_{-0.7}$	$2.5^{+1.7}_{-0.8}$	$2.8^{+1.9}_{-0.9}$	$3.2^{+2.1}_{-1.1}$	$3.6^{+2.4}_{-1.2}$
2	$2^{+1.3}_{-0.7}$	$2.2^{+1.5}_{-0.7}$	$2.5^{+1.7}_{-0.8}$	$2.8^{+1.9}_{-0.9}$	$3.2^{+2.1}_{-1.1}$	$3.6^{+2.4}_{-1.2}$	$4^{+2.7}_{-1.3}$
2·2	$2.2^{+1.5}_{-0.7}$	$2.5^{+1.7}_{-0.8}$	$2.8^{+1.9}_{-0.9}$	$3.2^{+2.1}_{-1.1}$	$3.6^{+2.4}_{-1.2}$	$4^{+2.7}_{-1.3}$	$4.5^{+3}_{-1.5}$
2·5	$2.5^{+1.7}_{-0.8}$	$2.8^{+1.9}_{-0.9}$	$3.2^{+2.1}_{-1.1}$	$3.6^{+2.4}_{-1.2}$	$4^{+2.7}_{-1.3}$	$4.5^{+3}_{-1.5}$	$5^{+3.3}_{-1.7}$
2·8	$2.8^{+1.9}_{-0.9}$	$3.2^{+2.1}_{-1.1}$	$3.6^{+2.4}_{-1.2}$	$4^{+2.7}_{-1.3}$	$4.5^{+3}_{-1.5}$	$5^{+3.3}_{-1.7}$	$5.6^{+3.7}_{-1.9}$
3·2	$3.2^{+2.1}_{-1.1}$	$3.6^{+2.4}_{-1.2}$	$4^{+2.7}_{-1.3}$	$4.5^{+3}_{-1.5}$	$5^{+3.3}_{-1.7}$	$5.6^{+3.7}_{-1.9}$	$6.3^{+4.2}_{-2.1}$
3·6	$3.6^{+2.4}_{-1.2}$	$4^{+2.7}_{-1.3}$	$4.5^{+3}_{-1.5}$	$5^{+3.3}_{-1.7}$	$5.6^{+3.7}_{-1.9}$	$6.3^{+4.2}_{-2.1}$	$7^{+4.7}_{-2.3}$
4	$4^{+2.7}_{-1.3}$	$4.5^{+3}_{-1.5}$	$5^{+3.3}_{-1.7}$	$5.6^{+3.7}_{-1.9}$	$6.3^{+4.2}_{-2.1}$	$7^{+4.7}_{-2.3}$	$8^{+5.3}_{-2.7}$
4·5	$4.5^{+3}_{-1.5}$	$5^{+3.3}_{-1.7}$	$5.6^{+3.7}_{-1.9}$	$6.3^{+4.2}_{-2.1}$	$7^{+4.7}_{-2.3}$	$8^{+5.3}_{-2.7}$	9^{+6}_{-3}
5	$5^{+3.3}_{-1.7}$	$5.6^{+3.7}_{-1.9}$	$6.3^{+4.2}_{-2.1}$	$7^{+4.7}_{-2.3}$	$8^{+5.3}_{-2.7}$	9^{+6}_{-3}	$10^{+6.7}_{-3.3}$
5·6	$5.6^{+3.7}_{-1.9}$	$6.3^{+4.2}_{-2.1}$	$7^{+4.7}_{-2.3}$	$8^{+5.3}_{-2.7}$	9^{+6}_{-3}	$10^{+6.7}_{-3.3}$	$11^{+7.3}_{-3.7}$
6·3	$6.3^{+4.2}_{-2.1}$	$7^{+4.7}_{-2.3}$	$8^{+5.3}_{-2.7}$	9^{+6}_{-3}	$10^{+6.7}_{-3.3}$	$11^{+7.3}_{-3.7}$	12^{+8}_{-4}

TABLE 3 STRAIGHTNESS, FLATNESS AND CENTRE TO CENTRE DIMENSIONS FOR DROP, PRESS AND UPSET FORGINGS

DROP, PRESS AND UPSET FORGINGS

NOTE. QUALITY E DOES NOT APPLY TO UPSET FORGINGS

RANGE OF TOLERANCES FOR STRAIGHTNESS AND FLATNESS

LENGTH ABOVE TO (INCL)		MM														
		0 100	100 125	125 160	160 200	200 250	250 315	315 400	400 500	500 630	630 800	800 1000	1000 1250	1250 1600	1600 2000	2000 2500
QUALITY	NORMAL	0·6	0·7	0·8	0·9	1	1·1	1·2	1·4	1·6	1·8	2	2·2	2·5	2·8	3·2

RANGE OF TOLERANCES FOR CENTRE TO CENTRE DIMENSIONS

LENGTH ABOVE TO (INCL)		MM										
		0 100	100 160	160 200	200 250	250 315	315 400	400 500	500 630	630 800	800 1000	1000 1250
QUALITY	NORMAL	±0·3 0·6	±0·4 0·8	±0·5 1	±0·6 1·2	±0·8 1·6	±1 2	±1·2 2·4	±1·6 3·2	±2 4	±2·5 5	±3·2 6·4

TABLE 4 FILLET, EDGE RADII AND BURRS FOR DROP, PRESS AND UPSET FORGINGS

DROP, PRESS AND UPSET FORGINGS

FILLET AND EDGE RADII TOLERANCES

r MM ABOVE – TO (INCL)	+	–
0 – 10	50%	25%
10 – 32	40%	20%
32 – 100	32%	15%
> 100	25%	10%

BURR TOLERANCES
(AND PARTING LINE FINS FOR UPSET FORGINGS)

WEIGHT (kg) ABOVE – TO (INCL)	a	b
0 – 1	1	0·5
1 – 6	1·6	0·8
6 – 40	2·5	1·2
40 – 250	4	2

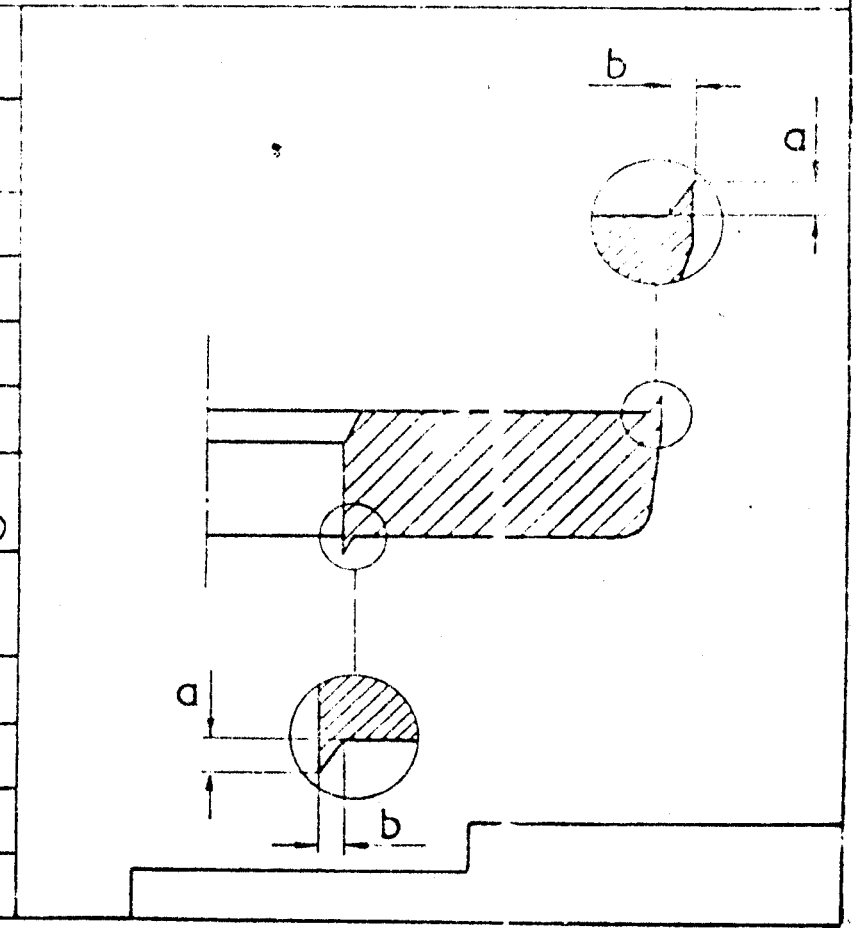

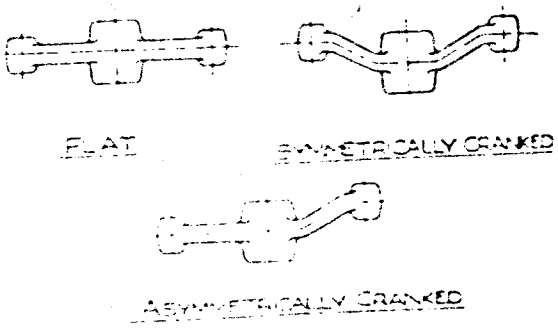

Fig. 1. Die lines

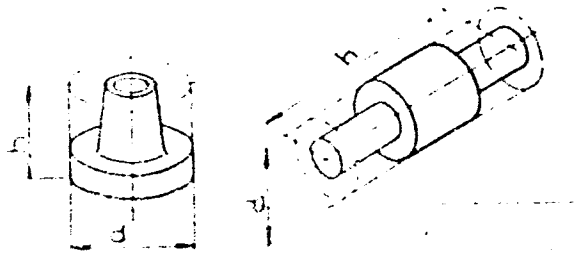

Fig. 2. Enveloping shapes of circular forgings

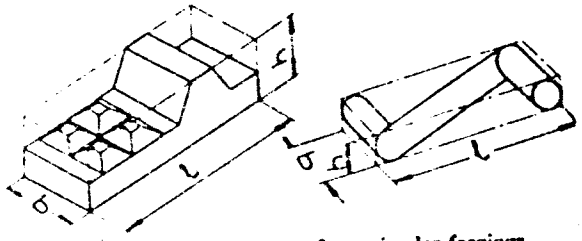

Fig. 3. Enveloping shapes of non-circular forgings

NOTE :

1. The type of steel used is determined as falling within one of the following categories :

   a. M1 - steel with carbon content not more than 0.65% and total of specified alloying elements not more than 5

   b. M2 - steel with carbon content above 0.65% or total of specified alloying elements above 5%.

2. Complexity factor of a forging is the ratio of the weight of the forging to the weight of the overall shape necessary to accommodate the maximum dimensions of the forging.

The resulting complexity factor is determined as falling within one of the following categories :

S4 - Upto and including 0.16

S3 - Above 0.16 upto and including 0.32

S2 - Above 0.32 upto and including 0.63

S1 - Above 0.63 upto and including 1.00